The Wireless World
THE PRACTICAL RADIO JOURNAL
25th Year of Publication

No. 814. FRIDAY, APRIL 5TH, 1935. VOL. XXXVI. No. 14.

Proprietors : ILIFFE & SONS LTD.

Editor :
HUGH S. POCOCK.

Editorial,
Advertising and Publishing Offices :
DORSET HOUSE, STAMFORD STREET,
LONDON, S.E.1.

Telephone : Hop. 3333 (50 lines).
Telegrams : "Ethaworld, Watloo, London."

COVENTRY : Hertford Street.
Telegrams : "Autocar, Coventry." Telephone : 5210 Coventry.

BIRMINGHAM :
Guildhall Buildings, Navigation Street, 2.
Telegrams : "Autopress, Birmingham." Telephone : 2971 Midland (4 lines).

MANCHESTER : 260, Deansgate, 3.
Telegrams : "Iliffe, Manchester." Telephone : Blackfriars 4412 (4 lines).

GLASGOW : 26B, Renfield Street, C.2.
Telegrams : "Iliffe, Glasgow." Telephone : Central 4857.

PUBLISHED WEEKLY. ENTERED AS SECOND CLASS MATTER AT NEW YORK, N.Y.

Subscription Rates :
Home, £1 1s. 8d. ; Canada, £1 1s. 8d. ; other countries, £1 3s. 10d. per annum.

As many of the circuits and apparatus described in these pages are covered by patents, readers are advised, before making use of them, to satisfy themselves that they would not be infringing patents.

CONTENTS

	Page
Editorial Comment	331
The Lorenz Blind Landing System	332
More About Cathode Rays	336
Current Topics	337
Fading Measurements	338
Self-capacity of Single-layer Coils	340
New Type Iron-cored Coil	341
Listeners' Guide for the Week	342
Valve Diagrams for Loud Speaker Loads (Concluded)	344
Broadcast Brevities	347
Readers' Problems	348
New Apparatus Reviewed	349
Foundations of Wireless XVII	350
Random Radiations	352
Letters to the Editor	353
Principal Broadcasting Stations	355

EDITORIAL COMMENT

Television's Future

Financial Problems of B.B.C. and Manufacturers

THERE are signs that the public is now settling down to a more sober view of television after the first outburst of excitement following the publication of the Television Committee's Report to the Postmaster General. The problems involved begin to show themselves in their proper perspective and it is realised now that when the proposed station in London starts transmitting this will only be a modest beginning, and that the development of an efficient service of public interest must be a gradual process.

In an article published in the issue of *The Wireless World* of August 3rd last year, under the title "Financial Aspects of Television," it was brought home to us how serious an obstacle to rapid development was the probable high cost of organising a national service. It was shown that the future of television was so bound up with the financial side that the technical aspect could not properly be considered except in association with financial considerations. Elsewhere in that article the statement appeared "It does not look as if the finances of the B.B.C., on the basis of their present proportion of the licences, could stand the strain of endeavouring to provide television programmes, even if they might scrape together the cost of erecting the stations over a fairly long period of time."

Fortunately, the B.B.C. is to have some assistance on the financial side, for it has now been announced that a grant of £50,000 is to be made to the B.B.C. through the Post Office estimates to aid the development of the television service. This sum should be a considerable assistance, but it looks as if an equal amount at least will have to be found from year to year for the provision of programmes alone, quite apart from the erection of stations.

On the commercial side, too, there are difficulties. Those concerns which have done most of the development work on television have already sunk large sums which have so far been unproductive of revenue, and if royalties paid to them as owners of patents by manufacturers of television receivers and profits through the sale of their own receivers are to be their only sources of revenue, it may be some time before any appreciable reward for their efforts can be garnered. In order to popularise television in this country too, manufacturers will undoubtedly endeavour to put out sets at the lowest possible prices, thereby leaving themselves a somewhat meagre margin of profit.

Financial Risks

It would be over-optimistic, too, to suggest that there is no element of risk attaching to the future success of television from the point of view of public appeal, and this, as we have pointed out before, is where the B.B.C. has had to shoulder a big responsibility. If the public has been led to expect too much of television and the scope of the programmes when they start is disappointing, then development may prove to be very slow indeed.

Meanwhile, we should do all that we can, short of raising the hopes of the public too high, to support the B.B.C. in their effort, as well as giving encouragement to those pioneer companies who have invested so much capital in the enterprise and who merit a full reward for their efforts and for the risks which they have been prepared to take.

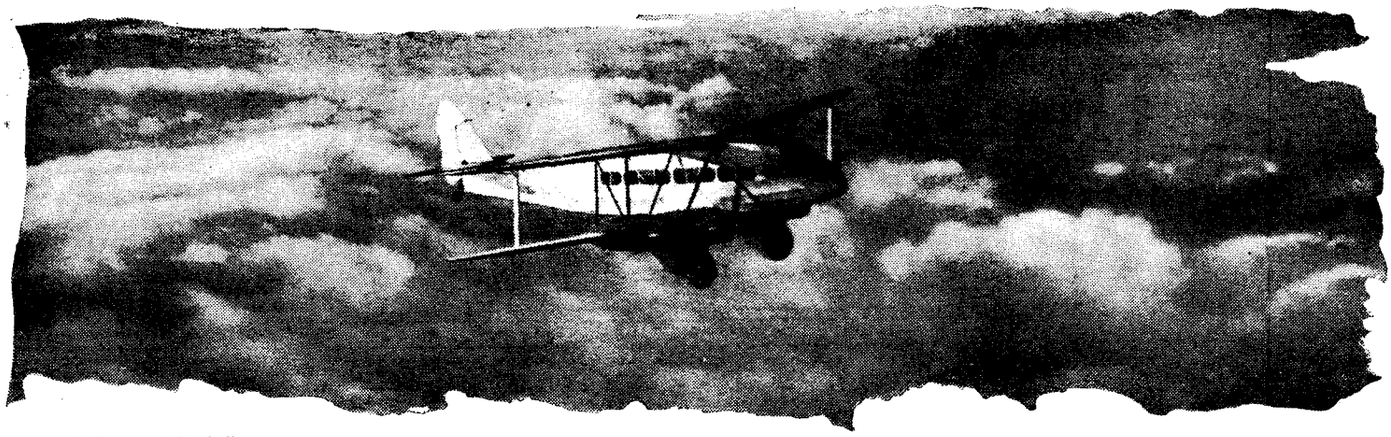

By Courtesy "Flight"

The Lorenz Blind Landing System

A NEW RADIO AID TO AERIAL NAVIGATION

By RODERICK DENMAN, M.A., A.M.I.E.E., A.F.R.Ae.S.

WHEN a pupil is taken up for his first flying lesson it is quite usual to find that he can fly straight, by watching a mark on the horizon, from the first moment that the controls are handed over. When the horizon is obscured, however, things become more difficult for him, and in the limit when visibility is reduced to zero only a skilled pilot whose aeroplane is equipped with gyroscopic blind flying instruments can remain aloft. The importance of means which will make possible blind landing in safety cannot be over estimated. The following article, describing a new system ingeniously based on the properties of ultra-short-wave radio transmission, is, therefore, of special interest.

THE requirements for instrument flight are well understood and they can easily be met so long as the height of the aeroplane above ground obstructions exceeds the maximum error of the instrument used to indicate height. In the best modern altimeters this error does not exceed about 75 feet. Now, with no more detailed height information than is provided by such means as this, it is actually possible on a large aerodrome to land an aeroplane in safety, by throttling the engine down and awaiting contact with the ground. But greater precision results, and the landing can therefore be made in a shorter length, if the pilot is shown how to follow a predetermined path of descent, and can train himself to use it. This is by no means easy, for throughout the approach and landing he must simultaneously and within narrow limits preserve a straight course towards the landing runway. In this article, however, we are less concerned with the airman's residual difficulties than with the technical aids that radio can offer him. With a passing observation that these difficulties are not insuperable, therefore, we will proceed at once with a description of a system which not only lays down a fixed horizontal path of approach but at the same time offers the pilot a variety of vertical paths of descent from which (it is claimed) he may choose the one best suited to the aerodynamic properties of his aeroplane—an assortment of Jacob's ladders, reshaped (as it were) to modern requirements.

A distinctive feature of the blind landing system to be described is that a single transmitter is used to delineate both the horizontal and vertical paths. This leads to a considerable simplification of the equipment which it is necessary to carry in the aeroplane, but however desirable this may be as an ultimate goal the writer shares the view of the American workers in this field, that at the present time it would have been better to keep separate the functions of a horizontal approach beacon and of a vertical landing beam. To this the Germans may fairly reply that use of the vertical radiation characteristic of their beacon is entirely optional, and that its performance as an aid to the approach in the horizontal plane has been in no way compromised. Whether the converse is also true, however, remains to be seen.

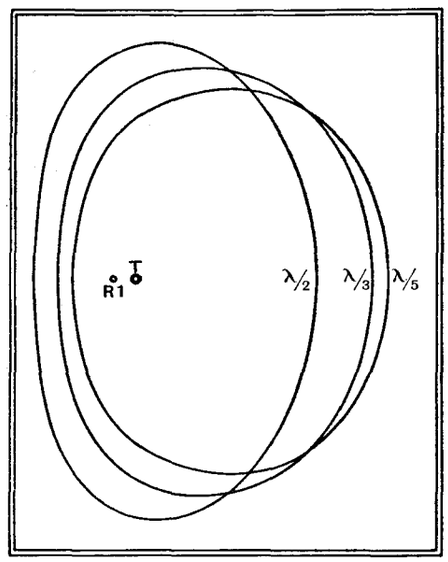

Fig. 1.—Horizontal field patterns. T, vertical dipole; R1, reflector, spaced λ/2, λ/3, λ/5 from T.

The basic principle of the German beacon is due to Herr P. Von Händel, of the Deutsche Versuchsanstalt fur Luftfahrt, but the system has been worked out in its present commercial form by the Lorenz Company. The horizontal directional effect will first be explained.

Horizontal Navigation

Fundamentally this depends on continuous indications of field strength at the position occupied by the aeroplane at any instant. Comparison is made of the field strength due to two radiation characteristics in the horizontal plane which are created alternately by the action of two reflectors on a dipole transmitting antenna. Since the dipole is erected vertically, the waves are polarised with the plane of the electric force perpendicular to the earth's surface. This avoids the introduction of any unwanted directional effects by the receiving antenna. The wavelength chosen is 9 metres.

Consider first the effect of a single reflector (Fig. 1) where T is an elevated transmitting dipole and R1 a vertical reflector with a remote-controlled switch inserted at its mid-point. When this switch is opened the shape of the resultant space pattern is circular, for the radiation is

The Lorenz Blind Landing System—

uniform in all horizontal directions. When, however, the switch is closed, the reflector becomes operative and the space pattern assumes an elliptical shape. The energy radiated in any given direction depends upon the phase of the current induced in R1 by the radiation from T, and this in turn obviously depends upon the spacing between the transmitter and the reflector.[1]

Equisignal Course Indication

The spacing actually used is about half a wavelength. The field strength in any given direction from the transmitter is proportional to the length of a line drawn in that direction from T to the boundary of the curve, and it is seen that the action of the reflector is to increase the field strength on the side of the transmitter opposite to it. If a second reflector R2 is now added as shown in Fig. 2, and this is keyed alternately with R1, then the field strength pattern will change from one ellipse to the other according to which reflector is keyed. At the points X and Y, which are common to both curves, the field strength will not be affected by keying, and as the curves corresponding to other values of field strength are all symmetrical with respect to a line joining these two points, XY is the line of equal strength. In order to provide distinctive signals for the areas lying on each side of this equisignal line, the reflector R1 is keyed with dots and R2 with dashes, it being arranged that the signals interlock

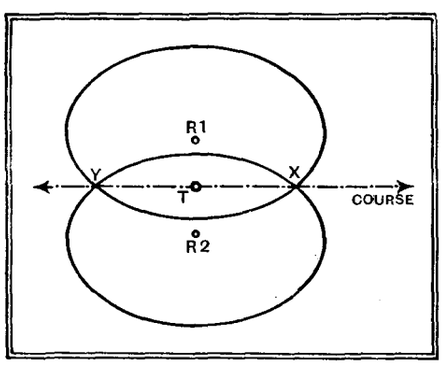

Fig. 2.—Constant field strength is maintained along the line XY.

and that the combined length of a dot and a dash is one second. This is shown in Fig. 3, where the area in which dashes are heard predominantly is at the top of the figure, and the area where dots are loudest lies at the bottom. Along the equisignal line the dots and dashes are of equal strength and merge into a continuous monotone, while slightly to each side of this line the dots (or dashes) will lack contrast in relation to the background signal. Along the line SAB, for example, the intervals between the dashes will be filled with dots having a signal strength relative to that of the dashes of SA/SB. Owing to the inability of the ear to detect differences of sound intensity of less than about 1 decibel, the area in which the signals, heard aurally, will be judged to be of equal strength will occupy an angle of a few degrees, and it is within this angle that the pilot must endeavour to keep his aeroplane. If he deviates to the right or left, dots or dashes will predominate in

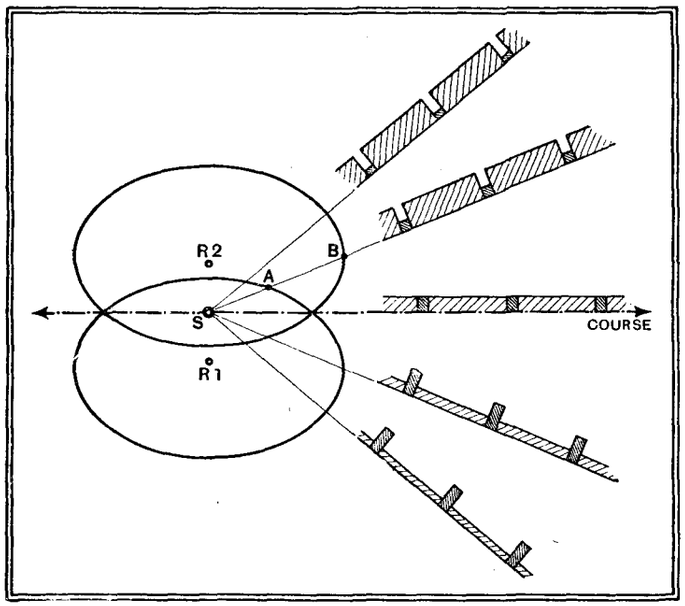

Fig. 3.—The "on-course" signal is formed of interlocking dots and dashes of equal strength.

the signal he hears in his headphones. These deviations are also made visible to him by means of a vertical pointer actuated by the receiver and mounted on the dashboard in front of him (See Fig. 4).

Some approximate indication of the distance of the aeroplane from the main landing beacon can be derived from estimates or rough measurements of signal strength. But experience has shown the necessity for accurate localisation of the machine's position at two strategic points in its advance. The first is the point at which the pilot should begin his final descent (or with reference to which he may estimate this point). The second comes just before the aerodrome is reached, when the pilot will often be able to complete the landing without further aid from his instruments.

The necessary warning signals are given by auxiliary transmitters of very low power. In the Lorenz system they are both operated on ICW on a wavelength of 7.9 metres, and they are keyed automatically, the one farthest from the aerodrome with 1,700 cycle dashes, and the second, or inner one, with 700 cycle dots. The transmitters are contained in boxes about eighteen inches square and are crystal-controlled. They are put in operation from the aerodrome and deliver about 5 watts output to a horizontal dipole mounted either one quarter or three-quarters of a wavelength above the earth, or (what is equivalent) above a wire netting reflector laid on the attic floor of a house. This arrangement gives the vertical polar diagram an inverted cone-shaped appearance in the plane of approach. The width of this cone is such that the duration of the marker signals will be from about six to ten seconds, depending on height. The vertical range of the marker beacons is at least 1,500 feet.

So far we have considered only the horizontal distribution of the energy radiated by the main beacon. To understand how the same beacon can be used to mark the path of descent, the reader should now turn to Fig. 5, which shows how the field is distributed in a vertical plane through the equisignal line. The curves of Fig. 5 are contours of equal field strength, and if all the conditions remained constant it would be possible (in theory at least) to provide the pilot with apparatus for the absolute determination of field strength, and for him to select thereby a certain number of millivolts per metre, known to correspond with the best landing path. In practice it is not possible to proceed by way of absolute field strength measurements, for over any long period the sensitivity of the aeroplane receiver is subject to large variations. It is comparatively easy to maintain steady

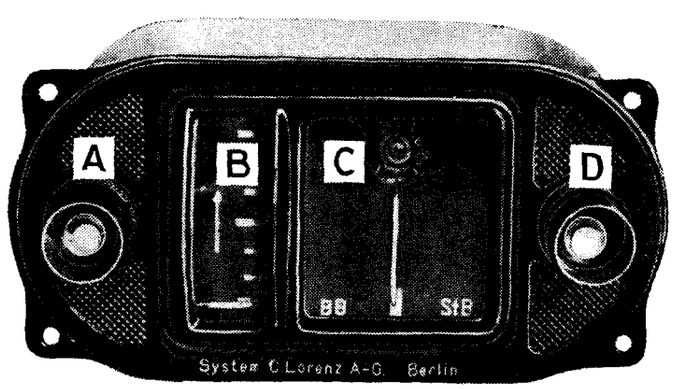

Fig. 4.—A, Neon lamp (first marker beacon signal); B, indicator for approximate distance and vertical landing path; C, on-and-off course indicator; D, Neon lamp (second marker beacon signal).

conditions while the actual landing is being made, however, so, instead of waiting till he reaches a particular line of constant field strength, the pilot, on nearing the aerodrome, descends to a height of

[1] The polar diagram is somewhat similarly affected by the length of the reflector wire.

The Lorenz Blind Landing System—

about 600 feet, as measured by his altimeter, and awaits the signal from the first marker beacon (Fig. 6). This is given him in two ways—visibly, by the flashing of a neon lamp on his dashboard instrument, and audibly, by the modulation tone of 1,700 cycles per second in his headphones, superposed on the signals from the main beacon. Receiving this warning the pilot glances at a signal strength indicator on the left of his dashboard instrument (Fig. 4) and notes the horizontal graduation mark against which the pointer rests. At the same time he closes the throttle and begins to glide down, keeping the pointer as nearly as possible on the same horizontal mark by the use of his throttle and elevator controls. The altimeter and the marker beacon have given him the co-ordinates of one point on that curve of constant field strength, which, whatever its absolute value, is the best one to pursue at that moment (Fig. 6). So he follows it as closely as he can, and a few seconds later hears the 700 cycle tone of the second marker beacon, which also causes the second neon tube to flash. Unless the visibility is almost zero, he is now low enough over the aerodrome to see the ground, but a completely blind landing can perhaps be made if necessary.

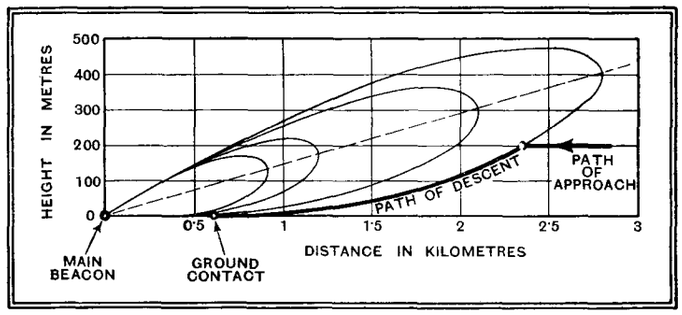

Fig. 5.—(Above) Vertical radiation pattern from an elevated dipole.

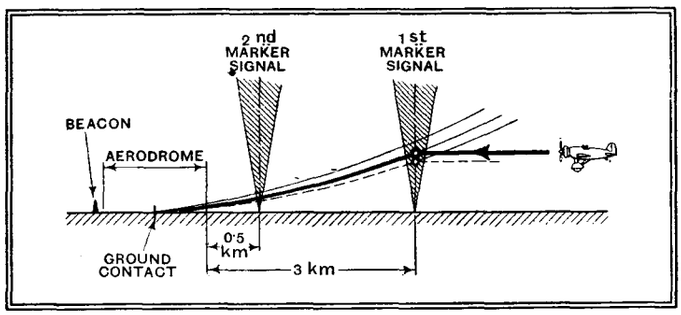

Fig. 6.—(Left) Near ground level the contours converge.

Details of Transmitters and Aeroplane Receivers

In using the method described it is evident that an error in the altimeter reading will cause the pilot to follow some other contour line than that shown in Fig. 6. These all converge as they near the ground, however, so that the effect of the error is very slight.

A point of considerable importance concerns the interference range of the beacon. As is well known, the range of ultra-short waves near the ground is limited by the curvature of the earth. Thus, at a height of 3,000 feet the range of the beacon is about 40 miles, but at 1,000 feet it is only about 15 miles. This, except in hilly country, is a sufficient height and distance from which to begin the approach, so that it should be possible to repeat the wavelength of 9 metres at many aerodromes, without mutual interference below 1,000 feet. At greater altitudes, on the other hand, the interference would be severe, and the use of a common wavelength is therefore possible only if independent DF methods are available by which the pilot can first find his way to within the service area of the chosen beacon.

The transmitter is shown in Fig. 7. It is crystal-controlled, with five stages of amplification, modulated about 90 per cent. in the third stage. The input power from the mains is about 4 kW., metal rectifiers being accommodated in the base of the transmitter bay. The centre bay contains the measuring instruments, remote control relays, and the equipment for keying. The transmitter itself occupies the upper bay, and the whole equipment measures 7ft. square by 2ft. in depth. In an English translation the makers state that the transmitter operates "without multiplication" with a frequency stability of 1 kilocycle for temperature variations between 20 deg. C and 35 deg. C. If by this it is meant that frequency doubling has been avoided, the combination of these two qualities in a quartz crystal seems to point toward the use of the new "AT" cut described last year in a communication from the Bell Telephone Laboratories.[1]

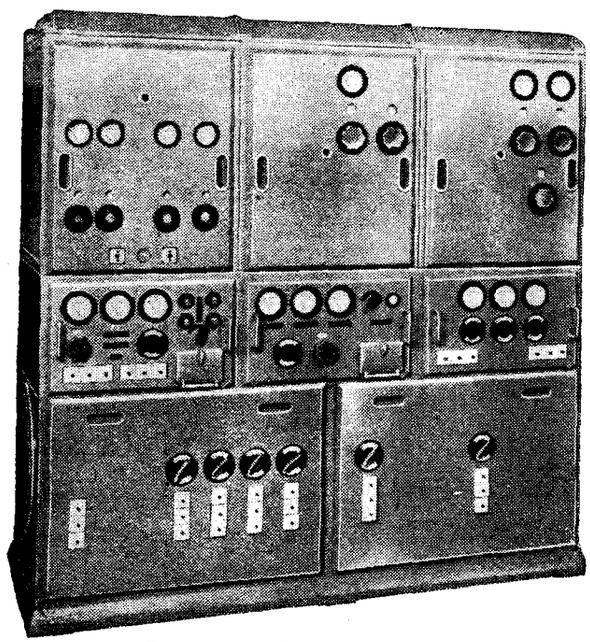

Fig. 7.—Remote-controlled 500-watt main beacon transmitter.

Monitoring and control equipment (Fig. 8) is centralised at the airport. Here audible and visible signals are given if the main or marker beacons fail to operate, while for airports which can be approached from opposite directions two alternative marker beacons can be provided and controlled by switchgear, the keying of the main beacon also being made reversible. Due to the position of the beacon on one side of the aerodrome, the vertical landing path can only be followed from one direction, but the correct horizontal direction of approach from either side can be given. The receiving apparatus for the aeroplane is shown grouped in Fig. 9 and diagrammatically in Fig. 10. The signals from the main beacon (9 metres, modulated 1,150 cycles per second) are received on a vertical rod antenna about 2ft. 4in. long and are passed through HF and detector stages.

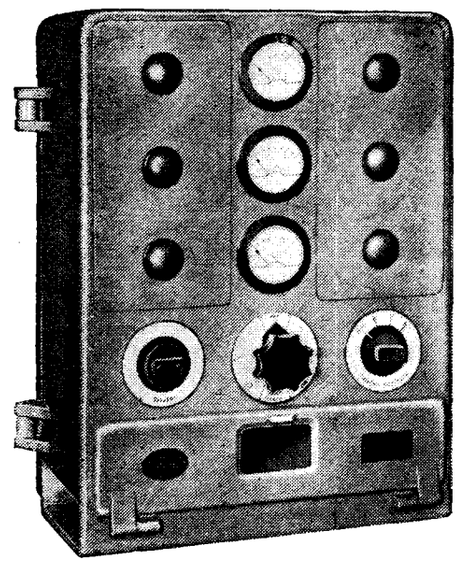

Fig. 8.—Airport monitor and control panel.

They then combine with the output from a separate detector, connected to a horizontal dipole for the reception of the signals from the two marker beacons (7.9 metres, modulated 1,700 and 700 cycles per second respectively). Two stages of low-frequency amplification

[1] "Some Improvements in Quartz Crystal Circuit Elements," Bell System *Technical Journal*, July, 1934.

The Lorenz Blind Landing System—

follow, and here headphones are connected so that each of the signals can be heard. (Fig. 11 shows the distinctive character of each signal.) For purposes of visual indication the various audio-frequencies are now separated by a filter system. As shown in Fig. 10, the instruments for approximate distance and landing path indication and for on- or off-course indication, respond only to the main beacon frequency of 1,150 cycles per second. Neon lamps each respond to one of the marker beacon frequencies and glow intermittently with the appropriate keying rhythm.

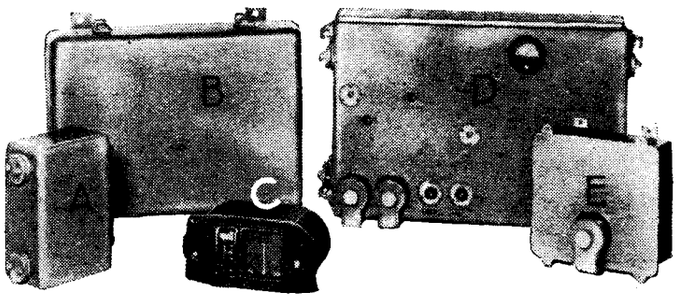

Fig. 9.—A, separate detector for 7.9 m. marker signals; B, battery box; C, flight panel instrument; D, H.F. stage and detector for signals from main beacon. Common L.F. stage for signals from main and marker beacons. E, filters for separation of audio-frequency signals.

The whole of the equipment (with the exception of the flight panel instrument) can be stowed away in any part of the aeroplane. The consumption is about 15 mA. at 150 volts HT and 0.7 amps. for filament current, which is taken from the usual aeroplane battery.

The above system has already been installed abroad at Berlin, Zurich, Hanover, and Munich, and in one form or another seems destined to become standardised in Europe. Medium waves are being used for approach beacons in Holland, but it is anticipated that the British Air Ministry, faced with acute wavelength congestion, will soon declare for the ultra-high frequencies, and that other countries will follow suit.

The next step should be to develop directional receiving apparatus for use on aircraft on these wavelengths, for the coming short-wave television transmitters will constitute a valuable network of high-power beacons for general air navigation purposes, and the time is drawing near when we shall no longer be able to deal with individual requests from aircraft for bearings or positions.

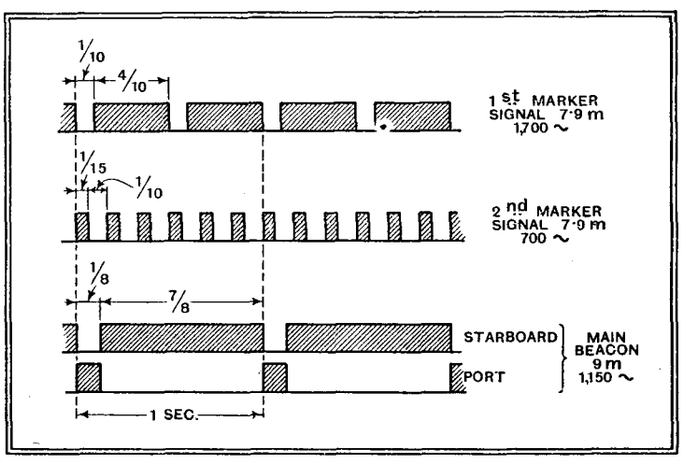

Fig. 11.—Distinctive modulation frequencies and keying speeds are assigned for each signal.

It is understood that arrangements are under discussion for the manufacture and sale of the Lorenz beacon equipment in this country.

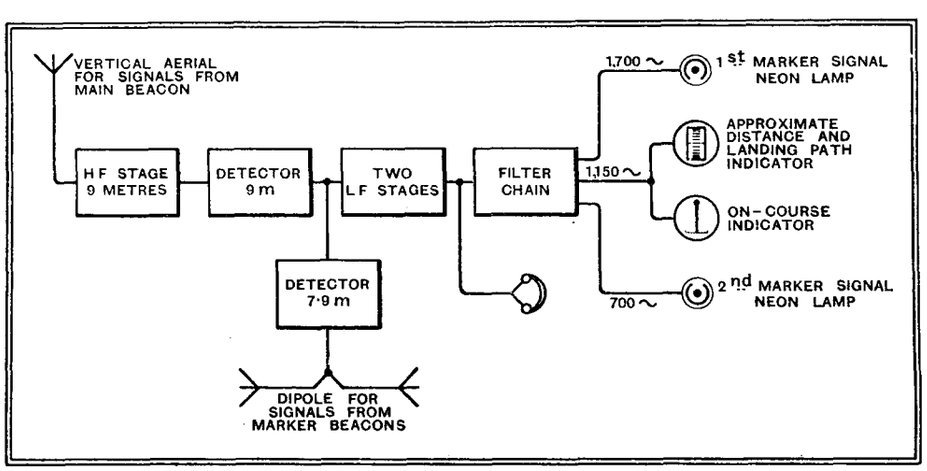

Fig. 10.—The main and marker beacon signals are first combined for aural reception and then filtered out to separate visual indicators.

UNBIASED

By FREE GRID

Liberty of the Subject

THINGS are coming to a pretty pass in this once glorious country when confidence men and thugs go free while ordinary honest citizens like myself are molested and interfered with by the police.

I was recently taking a stroll through the West End of London in the small hours of the morning in order to get a breath of fresh air after a strenuous day in the laboratory. In my hurry to get out into the open I did not bother to don appropriate dress but sallied forth in my laboratory gear.

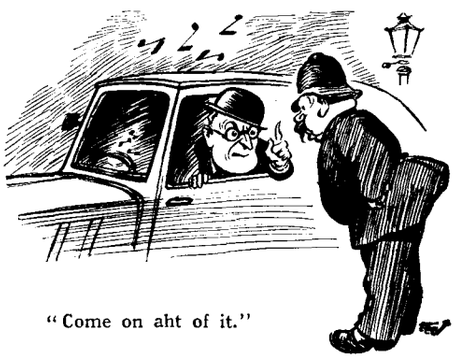

"Come on aht of it."

Suddenly I recollected an important experimental broadcast which was to be given by the B.B.C. for the benefit of the Nottingham transport depot. Glancing at my watch I saw that, even if I raced home at top speed, I should not be in time for the concert, so it occurred to me to knock up one of the residents of Fashionable Square with a request to be allowed to use the wireless set. And then a brilliant idea struck me. All round were serried ranks of parked cars, the owners of which were evidently disporting themselves in one of the numerous night clubs which infest these parts.

I was not long in locating a car fitted with radio. Slipping inside I soon had the programme tuned in and was at once carried away by the lilt of a Viennese waltz. Almost immediately an enquiring constabulary head was thrust in the window with a coarse command to "Come on aht of it." I raised my hand to enjoin silence but was roughly bundled out on to the pavement and marched off to the station, where the sergeant-in-charge, after listening in stony silence to my explanation, advised me in an exceedingly unmannerly way to "Try and think of a better one to tell his nibs in the morning."

Although my explanation was accepted next morning I could not help feeling that I had, to say the least of it, suffered loss of dignity. Incidentally, while the constable was engaged in his altercation with me in the car a successful burglary was, I found out later, perpetrated in the vicinity.

More About Cathode Rays

Wave-forms Made Visible

By "CATHODE RAY"

AN article in last week's issue explained the action of the cathode ray tube by a simple analogy. The author now proceeds to describe some of the most valuable properties of the tube.

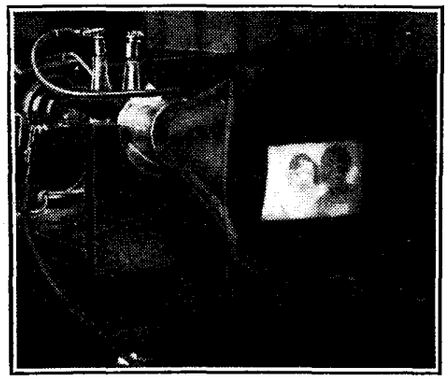

A small television image shown on a large tube: part of the screen has been masked.

LAST week I explained how to put together an excellent mechanical model for demonstrating the principles of the cathode-ray tube. Examples of the use of the tube had to be left over until now; but it will be easier to understand why it is used, in preference to any other contrivance, if its unique features are first pointed out.

We already know that the spot of light thrown on the screen is shifted a distance proportional to the voltage applied between a pair of plates situated near the nozzle, or—to use the correct term, which is more in accord with the velocity of the ray—the "gun." Therefore, by first noting the distance for a known voltage, it is possible to measure any unknown voltage within the limits of the screen. So far it is on all fours with an ordinary voltmeter. But whereas an ordinary voltmeter is quite incapable of measuring even slow alternating or fluctuating voltages, except as a sort of average, the cathode ray is so nimble that it can be made to follow every detail of a wave of voltage that is all over in a hundred-millionth part of a second. I have seen photographs of oscillations as rapid as this.

Another fault of the ordinary voltmeter is that, to a greater or lesser extent, it affects the circuit to which it is connected, and this rules it out from most of the really interesting duties, notably in radio circuits.

The Greatest Advantage

But the most fascinating possibilities of all are presented by the two dimensions in which the spot of light can move. A rapidly alternating voltage applied to one pair of plates would merely draw the spot out into a straight line, which would show the maximum voltage reached in each direction, but nothing else. If a suitable alternating voltage is applied to the second pair of plates, at right angles to the first, the line is opened out into a wave picture. So the tube shows not only the *amount* of the voltage wave, but its form, too.

By connecting up to a loud speaker one can *see* the wave-forms of the programme being received.

There is no end to the ways of juggling with the two pairs of plates. Incidentally, if it is more convenient to work with currents instead of voltage, it can be done by substituting coils for the plates.

The two dimensions at right angles immediately suggest a graph; and, instead of laboriously taking a number of readings of two quantities and plotting the points on a sheet of paper and joining them up into

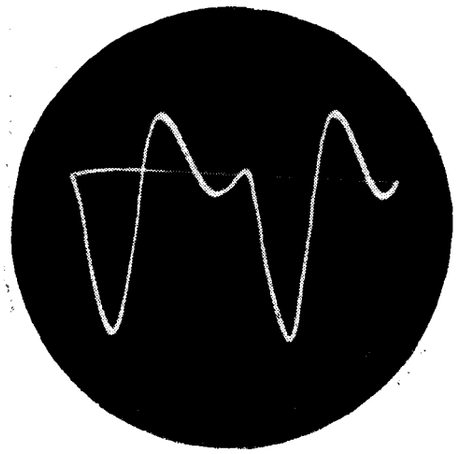

Wave-form investigation: illustrating the introduction of second-harmonic distortion due to over-biasing an amplifying valve.

a curve, one can connect up a cathode-ray tube, and, by arranging to keep on repeating the test continuously, the spot of light retraces its path so rapidly that the eye sees the curve on the screen; and the shape of it responds to every adjustment of the circuit. If you have ever tried to "line up" a band-pass tuner, in a superhet or elsewhere, you realise how delightful it would be to see the resonance curve of the set thrown on a screen, so that you could adjust the trimmers and couplings until it was right. That can easily be done with cathode-ray equipment.

Do not imagine that, because the cathode-ray method responds to voltages or currents, it is limited to electrical problems. It is so valuable for showing up what is happening rapidly that it is sometimes found well worth while to transform mechanical quantities into electrical ones, so as to be able to use the cathode ray in studying mechanical problems. It is rather like the old petrol-electric bus, in which the petrol engine was used, not to drive the vehicle direct, but to generate electricity for driving an electric motor, so that advantage could be taken of the better qualities of electric control and transmission.

There are endless uses for cathode rays in shedding light (literally!) on laboratory problems; but even before the war Campbell Swinton, one of the early contributors to *The Wireless World*, had realised that an obvious application for such a wonderfully controllable form of light is television. His ideas about this are amply justified to-day, for many television experts now believe that cathode-ray tubes will eventually find a place in every home—by easy payments!

It is conceivable how even our children in the conservatory (see last week) might, if provided with a stop-cock and a good deal more skill and co-ordination than is probable, succeed in producing a crude sort of moving image on the dome. And without going into any of the complicated details, it does not require a vast deal of imagination to see how a cathode-ray tube, with so much greater speed and obedience, can be used to distribute light on to its screen so as to give a picture. There is no great difficulty about that. Some of us have seen excellent cathode-ray television. The real problem is one of distribution of programmes to "lookers-in."

Reproduction of an untouched photograph of a television image appearing on the screen of a cathode ray tube.

CURRENT TOPICS

Events of the Week in Brief Review

French Regional Scheme

THREE of the new French stations are to start operations at the end of this month, namely: Murat-Toulouse (120 kilowatts); Lyons (90 kilowatts), and Lille (60 kilowatts). The entire Regional scheme is expected to be complete by the beginning of July.

Car Radio Test

A NOVEL car radio competition will be a feature of the Paris-Nice International Car Rally between April 13th and 18th. The test will be the accurate reception of several sets of figures broadcast by a local transmitter. It is to be hoped that competitors will not attempt such a complex receiving feat while on the move.

Radio and Riches

NEARLY half the world's wireless sets are in the United States, according to an estimate of the U.S. Department of Commerce, where the theory is being discussed that the prosperity of a country may be judged by the number of its "radios." The total number of sets in the world is put at 53,500,000, with 25,500,000 in America.

Holland's Highest

WHY is Holland's most famous station situated at Hilversum? The broadcasting authorities there have at last revealed the reason to a well-known French artiste who asked why a spot should have been chosen which was a long way from Amsterdam and not within easy reach of the capital. Hilversum, it seems, is the highest point in Holland, the base of the mast being at the dizzy altitude of 164 feet.

Where Ceylon Scores

FOR over a year Ceylon has picked up the B.B.C. Empire programmes on a special receiver, relaying them via the Colombo medium-wave station. "Given reasonably good atmospheric conditions," writes a correspondent, "these relays are excellent. . . . No such arrangements have been installed in India, however, and the Bombay transmitter has to do its best with old receiving equipment and without anti-fading devices."

"B.B.C." for South Africa

SOUTH AFRICA has decided to adopt Sir John Reith's recommendation for a public Corporation to take over the present African Broadcasting Company. The new Corporation will be created by statute and will not be under the control of the Government.

PROGRAMMES FOR TELEVISION. Regular transmissions of high-definition television are now made from the Berlin Broadcasting House, the programmes being changed once a week. The photograph shows the film-cutting table.

Television in France

GLOWING tales of the nearness of television have deceived the French public in much the same way as their British neighbours, and a falling off is recorded in the sale of broadcast receivers. The Paris Radio Manufacturers' Association has now issued a statement pointing out that the existing type of receiver will always be necessary, and adding: "At present there is nothing to suggest the sale of television apparatus at popular prices.

Speech Speed at the Microphone

TESTS at the Warsaw microphone have convinced the authorities that the ideal rate of broadcast speech is 120 words per minute. This rule may be adhered to in Poland; it is certainly not the case in France, where the announcers appear to manage 200 words per minute with ease. The Germans are not fast speakers at the microphone, but the slowest appear to be the preachers at the Dutch religious services.

Bones and Bores

THE charge that radio is responsible for 25 per cent. of domestic unhappiness should be invalidated by "bone-oscillator" attachments which are being advocated by Dr. O. H. Caldwell, director of the new American League for Noise Abatement. Hitherto, Ossiphones and similar devices have been intended for the use of the deaf, but Dr. Caldwell considers that they should be generally used to avoid imposing hardship and annoyance on other persons in the same room or house in which reception is taking place.

A radio armchair is being developed with a bone-oscillator in the head-rest so that the listener merely leans back in the chair and hears clearly the otherwise inaudible music or speech. Dr. Caldwell goes farther by suggesting that business chiefs should fit such attachments to their office chairs in order to pick up secret messages from an outside assistant without the knowledge of a caller.

"The bone-oscillator," says Dr. Caldwell, "is useful in another way when a boring visitor calls. By holding a pencil or pen thoughtfully against my teeth and also in contact with the oscillator hidden in my hand, I can listen to sweet music from a silent radio set while simulating polite attention to the bore's remarks."

Swiss Licence Drop

SWISS licence figures dropped slightly during February, the figure on March 1st being 363,814, as compared with 366,286 a month earlier. Approximately 24,000 Swiss listeners receive their programmes over the telephone lines and 17,000 subscribe to private relay exchanges.

Calm After U.S. Radio Storm

A STORM of criticism from Congress has led to sweeping changes in the organisation of the American Federal Communications Commission, which exercises complete control over all radio services, commercial and broadcasting. It has been alleged that the broadcasting regulations have been loosely interpreted and that politics have played a large part in the handling of applications for broadcasting facilities. The new chief of the "F.C.C." is Anning S. Prall, while Judge E. O. Sykes becomes chairman of the Broadcast Division.

Mr. Prall has stated that his first task will be to remove the stigma of a "political agency" from the F.C.C. and place it on a plane with such respected governmental agencies as the Interstate Communications Commission and the Federal Trade Commission.

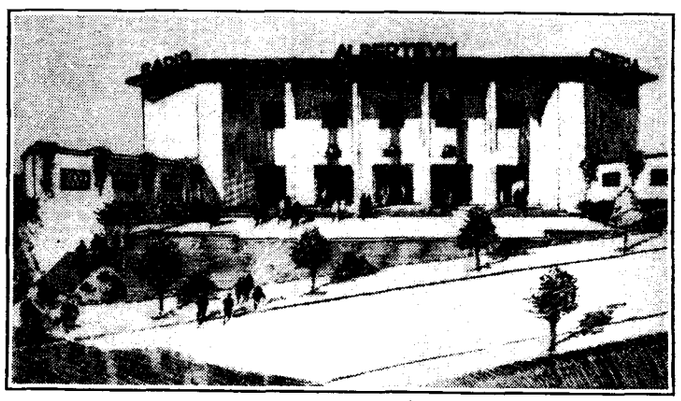

AT THE BRUSSELS INTERNATIONAL EXHIBITION a Palace devoted to Radio and Films will be an important feature. Here is an architect's drawing of the building, known as the "Alberteum."

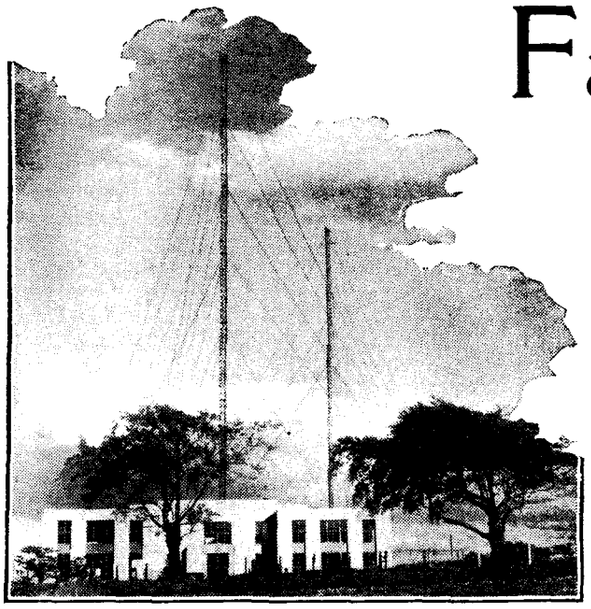

Fading Measurements

Observations of the U.R.S.I. Special Transmission

By D. A. BELL

THIS article describes the recent international test transmissions, methods of observing them, and conclusions drawn as a result of comparing signal strength and phase changes. Incidentally, the published intensity graphs provide an illustration of the advantages of an effective AVC system.

ANY enthusiasts who may have been listening for American stations in the early morning of March 13th were probably surprised to hear transmissions from Droitwich, Scottish Regional and Scottish National up to 3.15 a.m. The explanation is that on that night the B.B.C. were transmitting special signals for the U.R.S.I. (Union Radio Scientifique Internationale), both for the international comparison of frequency standards and for the investigation of fading and similar effects. During the principal transmission all three stations were modulated by a frequency of 1,000·000 c/s (i.e., 1,000 c/s accurate to 1 in 10^7) obtained from the N.P.L., so that laboratories abroad receiving the transmission could compare their own frequency standards with that of the N.P.L.

Since the depth of modulation was maintained constant, the audible output from a receiver was proportional to the carrier strength (in the absence of AVC), and variations of signal strength could be measured simply by means of an AC voltmeter connected across the loud-speaker terminals of the receiver. In addition to this simplification of signal strength measurement, with all stations transmitting the same signal it is possible to make direct comparisons between the signals from any two on a cathode ray oscillograph. If the two stations are at different distances from the receiving point, or if the signals take paths of different lengths owing to the difference of wavelength of the two transmissions, there will be a difference in phase between the 1,000-cycle notes received from them, and the cathode ray pattern will be some form of ellipse, varying in shape as fading occurs. From the shape and position of this ellipse the magnitudes and phase difference of the two signals can be determined.

But an ellipse moving about on the screen of a cathode ray tube is not easy to observe accurately, so that it is really desirable to use photographic recording of the cathode ray image at frequent intervals. As this was not possible, the author used a scheme known to power engineers as the "three voltmeter method" to determine the relative phases of the two 1,000-cycle notes as well as their amplitudes. The principle is that the two separate voltages and their vector sum are all measured; by solving the vector triangle the phase angle between the two can then be found, in addition to their individual magnitudes. For the sake of simplicity comparisons were made between Droitwich and each of the Scottish stations in turn, since Droitwich (about 60 miles from the receiving station) provided a signal likely to be free from fading. Droitwich's signal voltage was therefore assumed to be constant, and the measurements consisted in observing the voltages of the other signal and the vector sum every quarter of a minute. Fig. 1 shows a graph of the strength of signal from Scottish Regional and its phase with respect to the signal from Droitwich; the number of exact coincidences between the turning points (maxima and minima) in the amplitude and phase curves is surprisingly large. In fact, the author suspected that it might be due to some instrumental error, until it was found that the coincidences are of two kinds: those joined by continuous lines in the figures represent a "mirror image" correspondence—a peak in one curve opposite a hollow in the other—while in Fig. 2 (Scottish National) there are others, joined by dotted lines, which are direct similarities.

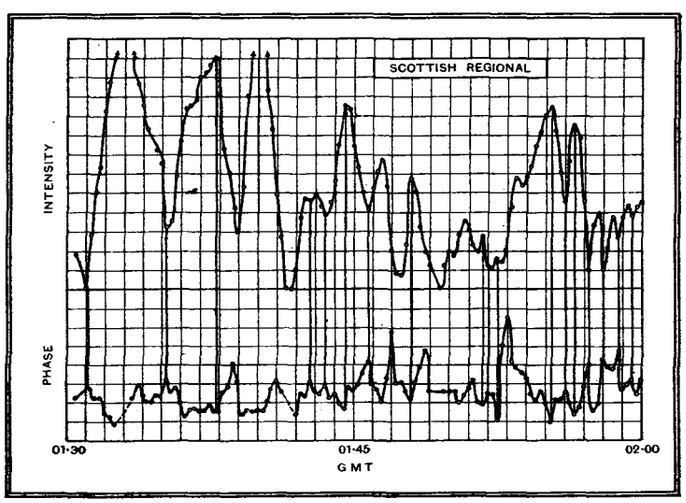

Fig. 1.—Quarter-minute variations of strength and phase of signals from the Scottish Regional Station.

It must be remembered that no observations were made between the marked points occurring every quarter of a minute, so that there is no reason to assume that the lines between the points represent the real shape of the curves in any detail; the lines are only drawn in to make clear the sequence of successive points. It is probable that if greater detail were available a number of points which apparently do not coincide, and are not marked as coincidences on the figures, would be found to fit exactly. An example of this is actually to be found on Fig. 2 at 2 hrs. 30 mins. 45 secs. It was noted that the amplitude was falling rapidly at 02.30 45s., and rising again rapidly at 02.31; a minimum between these points agrees with the maximum occurring in the phase curve near the first of them, but, judging by the points alone, the amplitude minimum would appear to occur at 02.31, where the phase curve has already reversed.

It is highly probable that outside the service area of a broadcasting station, i.e., where the ground wave is not strongly received, fading is due to interference

Fading Measurements—

effects between signals taking different paths *via* the ionosphere. In that case the phase of the received modulation will depend upon the length of the path taken by the particular ray which is predominant at any instant; and the fluctuations in the phase of the received modulation should correspond to the differences of the lengths of path of the different rays which are reaching the receiver. Since there are phase fluctuations in a 1,000-cycle note of the order of 30 deg. on Scottish Regional and 80 deg. on Scottish National, corresponding to time differences of about 0.08 and 0.22 milliseconds respectively, this would suggest variations of path length of the order of 15 miles and 40 miles for these two stations. It seems also that there is a mean phase difference of some 60 deg. between the signals from the two Scottish stations; if this is a true 60 deg. and not *n* whole cycles plus 60 deg., it represents a difference of mean path of some 30 miles in about 300 miles.

On the same night there was a transmission by the Bureau of Standards, Washington, of an unmodulated carrier of frequency exactly 5 mc/s (60 metres); this came over quite well, but subject to fading with a period of about 2 seconds. There is, of course, a regular schedule of these transmissions by the Bureau of Standards, with the call-sign WWV, but an additional transmission was made on the night in question for reports on field strength and fading from observers receiving the U.R.S.I. programme.

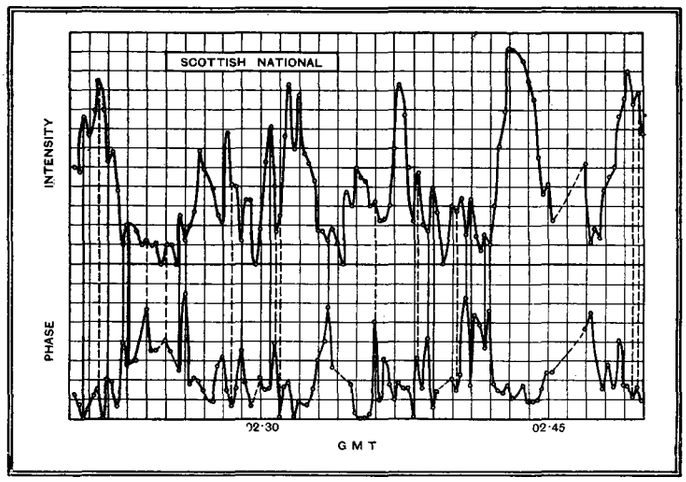

Fig. 2.—Observations on signals from Scottish National, recorded on the same basis as that of Fig. 1.

Murphy "26" Series

A New Superheterodyne Chassis in Table Model, Console and Radio-gram Form

THERE can be little doubt that many people have in the past delayed the purchase of a new receiver on the grounds that a few more weeks might see the announcement of some "startling new development" or drastic reduction in prices. With the object of removing this restricting influence—at least as far as their own products are concerned—Murphy Radio, Ltd., early in the year adopted the bold policy of outlining their programme for the next twelve months. The basis of that programme is uniform value for money, and the first step was a readjustment of the prices of the "24" series to bring them in line with the new "26" receivers scheduled for release in April, and the "28" series in July.

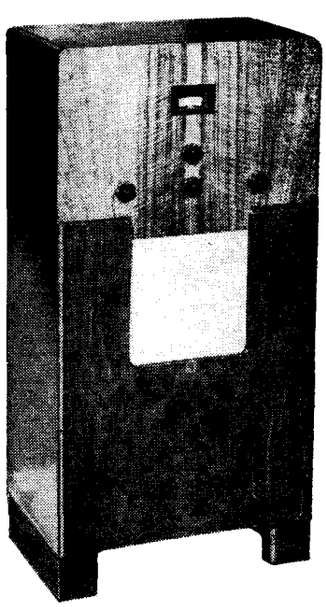

Rounded top edges and a new combination of woods in the front panel are the only changes in the console cabinet.

Technical details of the "26" receivers are now available, and it is revealed that the reduction in prices has been brought about by the acceptance of a lower overall gain as compared with the "24" series. As the latter provided an ample margin of range for most people's requirements, the reduced noise level on distant stations in the new receivers is a point in their favour.

The principal change in the circuit is to be found in the second detector stage in which a double-diode is now used without the triode amplifier which usually accompanies it. The omission of amplification in the AVC circuit will affect the behaviour of the set only for very large signal inputs, while on the LF side the reduced gain has made the heterodyne whistle filter of the A24 unnecessary. The cost has therefore been reduced by a decrease in the number and not in the quality of the chassis components.

Other changes in the A26 include the extension of the medium-waveband down to 195 metres, the incorporation of the on-off switch with the volume control instead of the wave-range switch, and the omission of the gramophone jack. In connection with the latter it is proposed to issue instruction to dealers indicating how gramophone connections may be made when there is a specific demand for this feature.

The successful "24" radio-gram cabinet design has been retained unchanged in the "26" series.

The circuit of the equivalent battery model (B25) remains unchanged, and the gramophone jack will be retained as there is no radio-gram equivalent. The fibre back of the set is cut away to facilitate removal of the accumulator.

The D26 is primarily a DC mains receiver, but will also function on AC if the source of supply is changed at some later date.

With regard to cabinet design, the radio-gramophone remains unchanged,

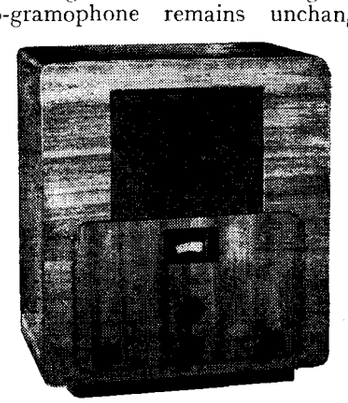

The control panel in the "26" table sets projects slightly from the front of the cabinet.

Murphy "26" Series—
while the modifications to the console are of a minor character. The Macassar ebony top panel is replaced by Indian laurel, and the top edges of the cabinet are rounded. The table model cabinet, on the other hand, is of entirely new design. It is executed in Australian walnut, and the control panel is set forward. The loud speaker opening is covered with red-brown silk stretched on a frame and fitting practically flush with the front of the cabinet. A slot is provided in the base for the new station-finding chart.

Prices are as follows:—Table models, A26 (AC), £11; D26 (DC/AC), £11 5s.; B25 (battery), £13. Consoles, A26C, £14 15s.; D26C, £15. Radio-gramophones, A26RG, £24 10s.; D26RG, £25 15s.

CLUB NEWS

Advantages of Single-Span

Mr. J. Wally described *The Wireless World* "Single-Span" receiver when Slade Radio (Birmingham) held their first meeting in their new headquarters at the Shakespeare and Dickens, Edmund Street. The lecturer showed how easily the Single-Span set could be operated by remote control. The absence of ganged condensers was, he considered, an immense advantage, and there appeared to be no part that an ordinary constructor could not build without difficulty.

Hon. Secretary, Mr. C. Game, 40, West Drive, Heathfield Park, Handsworth, Birmingham.

Designing a Modern Receiver

To-night (Friday) the Northwood Radio and Gramophone Society will discuss "The Design of a Modern Radio Receiver." At the last meeting Mr. C. W. Oatley, M.A., M.Sc., lectured on radio measurements for amateurs, and the full discussion revealed the interest taken by members in this all-important branch of radio.

Meetings are held at the Grange, Northwood, and full particulars can be obtained from the Hon. Secretary, Mr. S. P. Bristow, 6, Rofant Road, Northwood.

For Thames Valley Enthusiasts

The only qualification for admittance to the meetings of the Thames Valley Amateur Radio and Television Society is a keen interest in short waves and television. The Hon. Secretary, to whom enquiries should be addressed, is Mr. James N. Roe, 27, Baronsfield Road, St. Margarets-on-Thames.

Hoddesdon Calling

Test transmissions from its experimental station, G5HO, have recently been started by the Hoddesdon and District Radio Society. The transmitter is operated on 168 metres (1,785 kc/s), with a power of 10 watts and will shortly work on 40 metres with the same power. Reports should be addressed to Mr. T. L. Franklin (G5HO), Station Road, Broxbourne, Herts.

The station tests regularly at 11 a.m. on Sundays and at 8 p.m. on Wednesdays.

Short Waves Honoured

Mr. Charles C. Broy, the American Consul in London, honoured the International Short-wave Club by attending the annual dinner at Maison Lyons, Shaftesbury Avenue, W.1. Several broadcasting personalities and representatives of the radio trade were present.

European Representative: Mr. Arthur E. Bear, 10, St. Mary's Place, Rotherhithe, London, S.E.16.

Self-Capacity of Single-Layer Coils

A New Formula

In general the most important characteristics of a coil intended for use at radio frequencies are its inductance and its resistance. There is, however, one other characteristic which is at least as important as these in some applications, and is in all cases a limiting factor in the tuning range of the coil. This additional feature is the distributed capacitance—or, as it is called, the "self-capacitance" of the coil. In most connections, the self-capacitance can be regarded as a small fixed condenser permanently connected across the coil, and thus fixing an upper limit of resonant frequency. Generally speaking it will be desired, in designing a coil, to make this self-capacitance as small as possible consistent with other practical requirements, and accurate and tested formulæ for self-capacitance in terms of the dimensions of the coil are of practical value in this respect.

The issue of the *Proceedings of the Institute of Radio Engineers* for July, 1934, contains an article by A. G. Palermo describing the theoretical derivation and experimental confirmation of a new formula for self-capacitance, applicable to single-layer coils of which the length is of the same order as the diameter, or less.

The full mathematical form of this new formula is

C_o = self-capacitance in micro-micro-farads $= \pi D / 3.6 \cosh^{-1}(S/d)$

where D is the coil diameter, d the wire diameter (not including insulation), and S the pitch of the winding, all in centimetres. It can, however, be written more simply in the form—

$$C_o = KD$$

where K is a number which depends on the ratio of pitch to wire diameter, and which can be determined from the curve of Fig. 1.

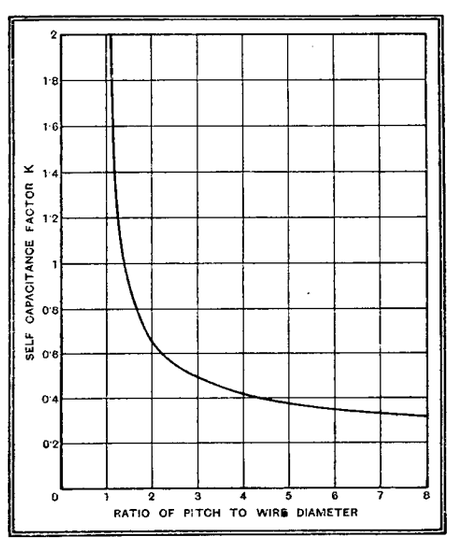

Fig. 1.—Curve for ascertaining the factor K.

For those who would like to plot the curve on a larger scale, the following values are given:—

S/d	K	S/d	K
1.0	∞	3.5	0.45
1.2	1.36	4.0	0.42
1.4	1.00	4.5	0.40
1.6	0.84	5.0	0.38
1.8	0.74	6.0	0.35
2.0	0.66	7.0	0.33
2.5	0.55	8.0	0.32
3.0	0.50		

The reliability of the formula is confirmed by measurements on nineteen coils of very varying dimensions and windings.

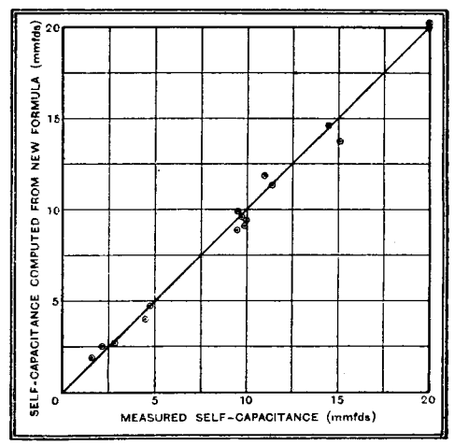

Fig. 2.—Values for self-capacity as ascertained by the method described are in close agreement with measured values.

The nature of the agreement between the measured and calculated values is shown in Fig. 2.

Importance of Pitch

The two most interesting points about this new formula are, first, that the self-capacitance of these single-layer coils does not depend on the number of turns; and, secondly, that, for a given coil diameter, it does depend on the ratio of pitch to wire diameter. Moreover, the nature of the dependence on this ratio is such that the self-capacitance increases rapidly with the closeness of spacing if the distance between the centres of successive wires is less than one wire-diameter. On the other hand, there is little to be gained in respect of self-capacitance by increasing the distance between centres to more than two wire-diameters. Thus, where it is specially desired to minimise self-capacitance (as, for instance, in the design of short-wave coils or chokes), a convenient practical rule for coils having length and diameter of the same order will be to space the winding so that there is room for two more turns between successive turns of the coil. A similar rule is likely to apply to chokes of length large compared with the diameter, even though the formula given above may not be very accurate in such cases.

New Type Iron-cored Coil

A German Development for Dual-range Inductances

A PARTICULARLY small and economical dual-range coil with very good electrical properties is described by H. Boucke in *Funk*, No. 41, 1934, an experimental model of which is shown in Fig. 1. The novelty of the design lies in one and the same iron core being used for both medium- and long-wave coils. The theoretical diagram of Fig. 2 shows how the medium-wave winding surrounds the cross-bar of a Sirutor "H" core of special high-frequency iron, while the large-diameter long-wave coil encircles the whole H round its middle, so that the two coils have their planes at right angles and are thus decoupled from each other. The presence of the long-wave coil does, it is true, add a small percentage to the losses in the medium-wave coil (owing to the increased self-capacity of the latter). This is more than compensated for, however, when the coils are screened, for the single shield can be more roomy than the one which would otherwise be provided for the medium-wave coil alone, and the loss due to eddy currents is thereby considerably reduced. The big long-wave coil has, of course, an average winding-diameter which is large compared with the core which it encloses, but the permeability of the Sirutor material is so high that the inductance is, nevertheless, increased by over 50 per cent. by the presence of the core. Under these conditions the iron losses are so small that nearly the whole of the saving in copper losses, resulting from this increased inductance, is obtained.

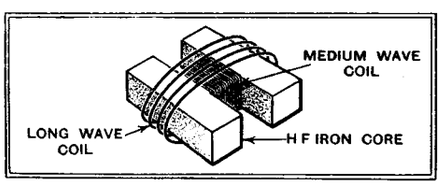

Fig. 2.—Showing the principle of the double use of the "H" core.

Two-range Trimming

An iron-cored high-frequency coil is not utilised to its full advantage if use is not made of the iron core for "trimming" purposes, so essential in multi-circuit receivers. The new dual-range coil lends itself admirably to this end, and Fig. 3 shows one of the methods by which the two ranges can be adjusted separately, the medium-wave winding by means of the HF iron disc *M* whose gap from the core can be adjusted, and the long-wave winding by means of the screw *L* which moves the coil-carrier so that the winding is more, or less, exactly over the cross-bar of the "H" core. A simpler method is, of course, to slide the long-wave coil by hand till the correct position is reached, and then to fix it there by a drop of cement. The medium-wave coil is trimmed first, so that its adjustment does not affect the long-wave range.

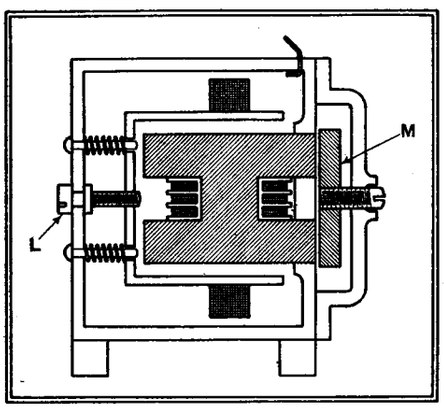

Fig. 3.—One arrangement for trimming the dual coil separately for each wave-range.

The paper shows how suitable the new design is for use in wave traps, which in this way can be made quite small and yet serve the two wave-ranges. It gives a number of diagrams and curves, including one (Fig. 4) showing the superiority of the resonance curve given by the new design over that of the air-cored coil of the "People's Receiver," and a sketch of proposed improvement to the shape of the "H" core in which the uprights are rounded, so that the long-wave coil would encircle the "H" more closely. Such a core could also be grooved so as to take *three* coils, all at right angles and so decoupled; this is only mentioned as a possibility. It is also suggested that the two-coil unit would be very suitable for use in band-pass filters; for this purpose provision would be made for inclining the coils at an angle such as 75 or 80 degrees, instead of their being fixed at 90 degrees. In a letter to *The Wireless World* the author also mentions and illustrates a new "H" core which is divided into two parts by a cut through the cross-bar; this type, developed in conjunction with Hans Vogt, of Ferrocart fame, makes it possible to slip a ready-wound medium-wave coil into place on the cross-bar.

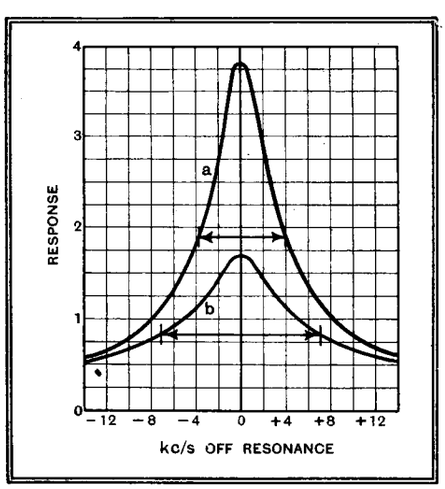

Fig. 4.—Comparison between the new coil and the "People's Receiver" coil.

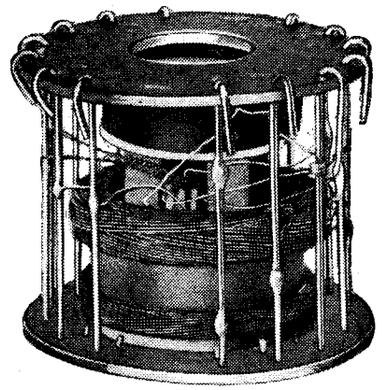

Fig. 1.—An experimental model of the new coil in which the long wave winding can clearly be seen.

BLUE PRINTS

For the convenience of constructors full-sized blue prints are available of the following popular **Wireless World** sets that have been fully described for home construction, price 1s. 6d., post free.

Olympic S-S Six. (Six-valve Single-span AC Superheterodyne in two units.) **Aug. 10th, 17th and 24th, 1934.**

Universal Single-Span Receiver for AC or DC mains. (Six-valve Superheterodyne.) **July 6th and 13th, 1934.**

New Single-Span Battery Four. (Four-valve Superheterodyne.) **Dec. 7th and 14th 1934.**

1935 AC Short-Wave Receiver, 12-70 metres. (HF-det-Pen with valve rectifier, in two units.) **Aug. 31st and Sept. 7th, 1934.**

Standard Battery Two. (Detector and QPP Output Stage.) **Sept. 28th, 1934.**

Standard AC Two. (Detector and LF giving over 2 watts output.) **Nov. 9th, 1934.**

Standard AC Three. (Straight HF-det-Pen circuit with valve rectifier.) **Oct. 19th and 26th, 1934.**

QA Receiver. (AC Four-valve HF and detector unit designed to work with Push-pull Quality Amplifier.) **Feb. 8th and 15th, 1935.**

Push-Pull Quality Amplifier. (AC resistance-coupled double push-pull.) **Feb. 22nd, 1935.**

These can be obtained from the Publishers, Iliffe and Sons Ltd., Dorset House, Stamford Street, London, S.E.1.

Listeners' Guide for the

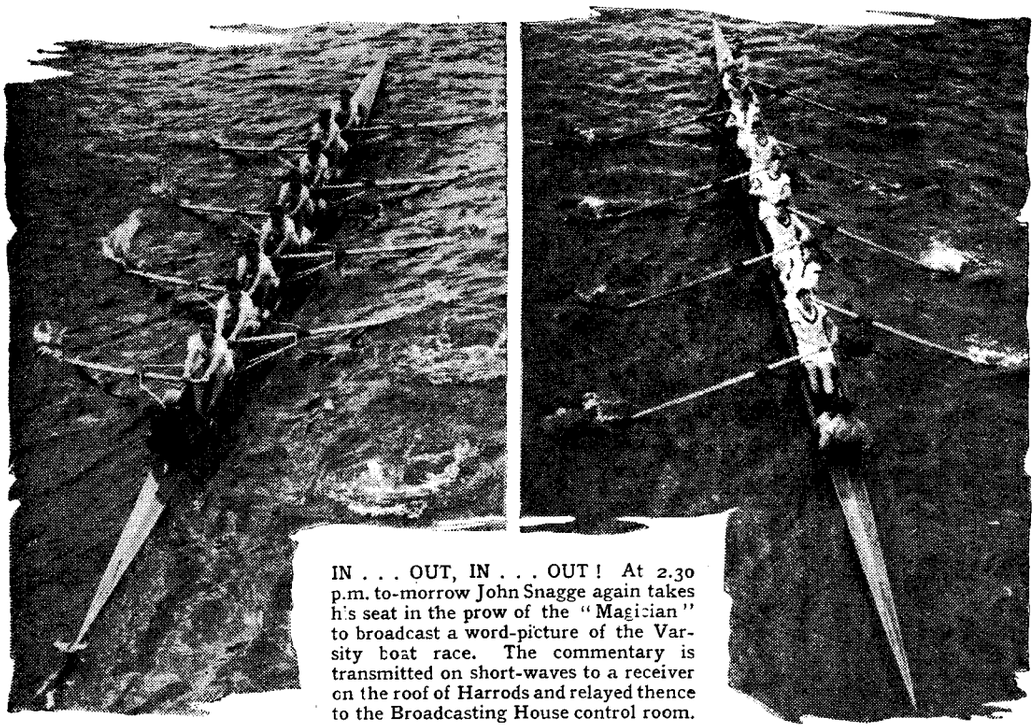

IN . . . OUT, IN . . . OUT! At 2.30 p.m. to-morrow John Snagge again takes his seat in the prow of the "Magician" to broadcast a word-picture of the Varsity boat race. The commentary is transmitted on short-waves to a receiver on the roof of Harrods and relayed thence to the Broadcasting House control room.

THE BROADCAST OF THE YEAR

THERE is only one transmission of any real importance during the next seven days, viz., the Boat Race. All other features fade into comparative insignificance. John Snagge, following the crews to-morrow afternoon (Saturday) in the launch "Magician," will tell the tale from Putney Bridge, which sees the start between 2.30 and 2.45, right up to the finish at Mortlake—and then some. All B.B.C. wavelengths will be used for this, the biggest free show on earth.

Later in the afternoon National listeners can tune in to Hampton Park, Glasgow, where the International Soccer match between England and Scotland will be described by George Allison.

"THE RIVALS"

SHERIDAN'S "The Rivals" comes very close to the "School for Scandal" for the brilliance of its wit and ingenuity of plot. On Sunday afternoon Peter Creswell's broadcast version of "The Rivals" will be given in the National programme, with Baliol Holloway as Sir Anthony Absolute, Diana Churchill as Lydia Languish, and Athene Seyler as Mrs. Malaprop. The music will be under the direction of Kneale Kelley with the B.B.C. Theatre Orchestra.

FOR YOUR DIARY

AT 9.20 on Wednesday next, Frankfurt offers something out of the ordinary—a Mandoline Concert relayed from Locarno.

"Waltzes and Spring Voices"—a grand variety programme—will be broadcast from Deutschlandsender and Frankfurt between 7.15 and 9 p.m. on April 8th.

"Bellini," a play on the life of the composer, figures in the Radio-Paris programme tonight (Friday) from 7 to 8.15 p.m. Authors: Cita and Suzanne Malard, mother and daughter, successful collaborators in radio drama.

RADIO COMIC STRIP

IMAGINE a "comic strip of the air" and you have some notion of the "Coo-Coo-Noodle Club Program" which goes out to Regional listeners on Monday next, April 8th. The feature was broadcast every Friday night over the Canadian network for seven years, and is built around the characters of Bill, Swifty and their horse, Pumpernoozle. Big Bill Campbell, who plays the part of Bill, received 304,000 fan letters one winter in Canada.

CHOICE OF OPERAS

GOUNOD'S "Faust" will be relayed from the Scala at Milan and Monte Ceneri at 8 p.m. tomorrow (Saturday), and during the same evening Munich relays Weber's "Der Freischütz" from the National Theatre.

"DINNER AT EIGHT"

EDNA FURBER'S famous play, "Dinner at Eight," done into Danish, will be heard in the Copenhagen programme from 7 to 9 p.m. on Tuesday, April 9th. Another item of interest to British listeners occurs on the following evening at 7.15, when Copenhagen gives a chamber concert entitled: "From the Grand Past of English Music," featuring Mr. Folmer Jensen (cembalo). Chorus and orchestra will be conducted by Fritz Mahler. The composers represented are Byrd, Dowland and Purcell.

DANCE, FOOL, DANCE

STANFORD ROBINSON, who conducts the B.B.C. Theatre Orchestra in a programme of Old Time Dance Music on April 9th (Regional), hopes that listeners will dance. It seems that people really do respond to such invitations, for quite a large mail is received. One writer stated: ". . . what pleasant memories it awakened and made me feel Blow the Income Tax man, it's grand to be alive. I felt I must dance, and being alone, I grabbed the dog and had a whirl or two, and he, being a Scotsman, was very perturbed at my behaviour."

FRENCHMAN'S TRIBUTE TO WAGNER

A FRENCHMAN who added "er" to his name to make it sound German, in honour of Wagner, wrote an opera entitled: "Maître Wolfram," which will be broadcast from Radio Paris on Sunday next, April 7th. The composer, Ernest Rey (later Reyer) died at the hearty age of eighty-six, in 1909.

DUNSANY RADIO PLAY

No distinguished playwright has done more than Lord Dunsany for the development of broadcast drama. At 10.15 p.m. on Thursday, April 11th, Lord Dunsany's new microphone play, "Three Moods of Fame," will be broadcast on the National wavelengths, the cast including Gladys Young, Lawrence Hanray, and Philip Wade. The Moods are represented in three acts.

There is always an element of fancy in Lord Dunsany's plays which no one at Broadcasting House can handle more happily than Lance Sieveking, who is the producer on this occasion.

30-LINE TELEVISION

Baird Process Transmissions. Vision, 261.1 m.: Sound, 296.2 m.

SATURDAY, APRIL 6th., 4.30—5.15 p.m.

Arthur Ashey (comedian); Morgan Davies (songs); Beryl Seton (dances); Jack Browning (dances); Helen Raymond (songs); Sydney Jerome's Quintet.

WEDNESDAY, APRIL 10th. 11—11.45 p.m.

Georgie Harris (stage and screen comedian); Olivette and Barrichat (dances); Dudley Rolph (songs and dances); Sydney Jerome's Quintet.

Week

Outstanding Broadcasts at Home and Abroad

B.B.C. SYMPHONY CONCERT

ARTUR SCHNABEL, soloist in the Pianoforte Concerto, No. 23 (Mozart), which will be played at the B.B.C. Symphony Concert at the Queen's Hall on Wednesday next, April 10th, is renowned for his authoritative interpretations of the classics. He was an infant prodigy and at six years of age was accepted as a pupil by the great Leschetizky, reaching the front rank of pianists when still a very young man. He is on the staff of the State Academy of Berlin.

The concert will be broadcast nationally, Adrian Boult being the conductor.

The second part includes Elgar's symphonic study, "Falstaff."

JAPANESE MUSIC AND SURPRISE ITEMS

JAPANESE songs will be sung in English by Miss Dora Bodin in the Stockholm programme at 4.30 to-morrow afternoon.

"YOUTH AT THE HELM," the sparkling comedy now running at the Globe Theatre, provides an excerpt at 7.30 on Wednesday next in the "From the London Theatre" series. Above are Adele Dixon, Owen Nares and Kay Hammond, who will enact a scene in the studio (Regional).

From the same station at 8.45 p.m. the first Swedish "Surprise Item" will be given under the title of "Microphone Curiosity."

SKETCHES IN INDISCRETION

WODEHOUSE devotees include Cabinet ministers, bishops, legal luminaries, and many other important people whose normal lives lack just that extra bloom that enriches the characters of Archie, Piccadilly Jim, Ukridge, and other members of the tribe.

ARCHIE, a typical P. G. Wodehouse hero, makes his bow in the National programme to-night in the first of six sketches based on the novel, "The Indiscretions of Archie," published by Herbert Jenkins. Peter Haddon takes the name part.

Up till now the Wodehouse works have been strangely neglected by the B.B.C., but from to-night (Friday) at intervals until next June, we are to have six sketches entitled: "The Indiscretions of Archie," adapted from the book by Douglas Hoare. Peter Haddon plays the part of Archie, the Englishman who marries the daughter of an American hotel magnate, and does his best to placate "the man eating fish" whom Providence has given him as a father-in-law. To-night's sketch goes out on the National wavelengths at 7.20.

DAIRY FARMING AND DEPORTMENT

GOOD old Edwardian farce comes to Regional listeners at 8.50 p.m. on Wednesday next, April 10th, in "The Dairymaids," which first saw the light at the Apollo Theatre, London, in 1906, being produced by Robert Courtneidge. The plot revolves round a model dairy farm and an academy of deportment, and the score, by Paul Rubens and Frank E. Tours, contains such tuneful hits as "Tinker, Tailor," "Poaching," "Love among the Daisies," and the "Sandow Girl."

In Gordon McConnell's broadcast version the part of Joe Mivens will be played by Rex London, a comedian making his first microphone appearance. "The Dairymaids" will be repeated on the National wavelength on Thursday evening.

PASSION MUSIC

THE first part of Bach's St. Matthew Passion is to be broadcast at 11 a.m. on Sunday by the Bach choir in the Queen's Hall under the direction of Reginald Jacques. The soloists will be Elsie Suddaby (soprano), Betty Bannerman (contralto), Steuart Wilson (tenor), Heddle Nash (tenor), William Parsons (bass), and Keith Faulkner (bass).

The second part will be heard at 2.30.

PADEREWSKI JUBILEE CONCERT

A REPETITION of the first concert in which Paderewski played in Warsaw fifty years ago will be broadcast by Polish stations at 7 p.m. on Tuesday next, April 9th, and we may be sure that the artists will do full justice to the works of their great compatriot. The long programme opens with Beethoven's "Prometheus" Overture.

THE AUDITOR.

HIGHLIGHTS OF THE WEEK

FRIDAY, APRIL 5th.

Nat., "Indiscretions of Archie." ¶Jack Barty's Party. ¶Conversations in the Train.

Reg., Organ Recital by Berkeley Mason. ¶"Episode Past," a play by Valentine Dunn.

Abroad.

Warsaw, 7.15, French Music by the Philharmonic Orchestra. Conductor: Fitelburg.

Strasbourg, 7.30, St. John Passion (Bach) from Besançon.

SATURDAY, APRIL 6th.

Nat., 2.30, The Boat Race. ¶In Town To-night. ¶"Music Hall." ¶Glasgow Orpheus Choir.

Reg., American Half-Hour—I. ¶B.B.C. Orchestra (C).

Abroad.

Vienna, 7, Twentieth Anniversary Concert of the Bruckner Society, by the Vienna Symphony Orchestra.

SUNDAY, APRIL 7th.

Nat., Bach's St. Matthew Passion. Sheridan's "The Rivals." ¶Leslie Jeffries and Orchestra, Grand Hotel, Eastbourne.

Reg., Music by Frank Bridge. ¶Sunday Orchestral Concert. Conductor: Ernest Ansermet.

Abroad.

Berlin (Funkstunde), 7.40, Opera: "The Legend of the Blind Yolanta" (Peter Tchaikowsky).

Toulouse, 8, Opera "The Mastersingers" (Wagner)—a concert version.

MONDAY, APRIL 8th.

Nat., Foundations of Music: Bach Celebrations (throughout week). ¶"Coo-Coo-Noodle Club Program." ¶International String Quartet.

Reg., B.B.C. Dance Orchestra. ¶B.B.C. Military Band.

Abroad.

Kalundborg, 8, Schubert-Weber Concert by the Radio Orchestra.

TUESDAY, APRIL 9th.

Nat., Passion Play: "The Guest Chamber" relayed from St. Hilary, Cornwall. ¶"Freedom," by Rt. Hon. Herbert Morrison.

Reg., Medvedeff's Balalaika Orchestra. ¶Old Time Dance Music by B.B.C. Theatre Orchestra.

Abroad.

Paris P.T.T., 7.30, 'Manon" Concert by French National Orchestra.

WEDNESDAY, APRIL 10th.

Nat., Reginald King and His Orchestra. ¶B.B.C. Symphony Concert at the Queen's Hall.

Reg., Walford Hyden Magyar Orchestra. ¶Musical Play: "The Dairymaids."

Abroad.

Strasbourg, 7.45, Verdi's "Requiem," relayed from the Metz Conservatoire.

THURSDAY, APRIL 11th.

Nat., "The Dairymaids," ¶"I've Got to Have Music." ¶"Three Moods of Fame," by Lord Dunsany.

Reg., B.B.C. Variety Orchestra: "Music Serious and Syncopated." ¶Organ Recital by J. I. Taylor. ¶B.B.C. Orchestra (E) conducted by Joseph Lewis.

Abroad.

All German Stations, 10, German Contemporary Music.

Valve Diagrams for Loud Speaker Loads

Working Characteristics of the Output Stage

THIS, the concluding instalment, deals with the preparation of output valve load diagrams in the practical case where the load applied is both resistive and capacitive.

Concluded from page 326 of last week's issue

IN the first article we showed how to construct valve load diagrams for circuits containing (*a*) a pure resistance through which the anode feed current passes, thereby reducing the anode voltage on the valve; (*b*) a pure resistance through which the feed current does not pass, *i.e.*, a dynamic resistance, so to speak; (*c*) a pure inductance. Since both resistance and inductance are associated with a moving-coil loud speaker, we will now show how the load curves for a pure resistance and a pure inductance can be combined. In this way a single load curve is obtained, representing the case of an inductive speaker coil which would be encountered in practical work. The output circuit is of the form illustrated in Fig. 6 (*a*) where a choke-condenser filter is used to keep the DC out of the load.[1] It will be understood that C and L must be very large in order that their effect on R1 and L1 is negligible. In the absence of signals the valve is operated at the point Q in Fig. 8, which corresponds to an anode voltage of 500, a feed current of 120 milliamperes and a grid bias of -135 volts. Since the resistance and inductance are in series (in practice they are one and the same coil), the same current passes through both, so the load diagram is unaltered in this respect. The voltage on the combination is, however, the *vector* sum across each component. The *vector* sum means that in adding the voltages we must consider the instantaneous voltages, since the maximum values do not occur simultaneously. They

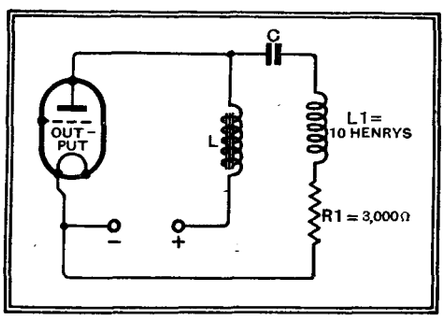

Fig. 6a.—Filter-fed loud speaker.

are, in fact, 90 degrees out of phase, as shown in Fig. 6 (*c*).

[1] This is dynamically equivalent to Fig. 6 (*b*) provided L and C are large enough. It is convenient to refer all impedance values to the anode circuit of the valve.

The first operation is to find the dynamic resistance line and the inductance ellipse. To do this we must have some practical data from which to work. Let us assume that L1 = 10 henrys, R1 = 3,000 ohms[2], and the maximum swing of the alternating voltage on the anode is 200 volts at a frequency of 50 cycles per second. The electrical impedance of L1 and R1 in series is found from the formula $Z = \sqrt{(R1^2 + \omega^2 L1^2)}$, where as usual $\omega = 2\pi$ frequency, i.e. the angular frequency. Using the given data, we have $Z = \sqrt{((3000)^2 + (1000\pi)^2)}$, which works out to be 4,360 ohms. As an alternative method of obtain-

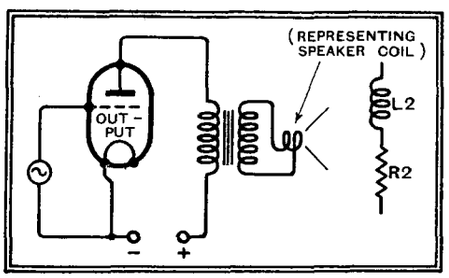

Fig. 6b.—Transformer coupled loud speaker.

ing Z we can use a right-angled triangle as shown in Fig. 7, where the two components are set off at 90 degrees to each other, since this is the phase difference of the voltages across them (see Fig. 6 (*c*). The line ACD represents the phase of the current through, and of the voltage on R1, BC represents the phase of the voltage on L1 and ABE the phase of the voltage across the combination. The angle θ is the phase angle of the anode voltage to the anode current, and it is nearly 45 degrees, since AC and BC are approximately equal. Also to a certain scale AC, BC and AB represent the magnitude of the voltages across R1, L1 and R1L1 in series. We have now to incorporate this information in Fig. 8, to obtain the combined load ellipse.

Maximum AC Current.

The alternating current through R1L1 is found from the formula Current = Applied Voltage / Impedance, or symbolically $I = E/Z$. From above $E = 200$ volts and $Z = 4{,}360$ ohms, so the current $I = 200/4{,}360 = 0.046$ ampere, or since the

[2] The value L1 = 10 henrys is much too high for a loud speaker. It is chosen merely by way of illustration.

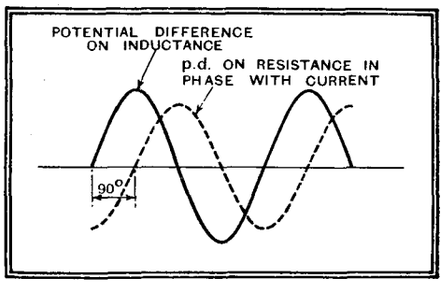

Fig. 6c.—Voltage distribution for resistive-capacitive load.

vertical scale in Fig. 8 is in milliamperes, we have I = 46 milliamperes, this being the maximum value.

The voltage drop across the inductance alone is $\omega L1 = 2\pi \times 50 \times 10 \times 0.046 = 46\pi = 145$ volts nearly. Knowing the values of voltage on and current through the inductance, the load ellipse can be drawn as shown in Fig. 5. This has been done in Fig. 8, where FQ = GQ = 145 volts and HQ = KQ = 46 mA. The resistance line is got by drawing QS to give QT / TS = 3,000 ohms, this being obtained by aid of the scales on the horizontal and vertical axes. The next step is to combine the straight line and the ellipse so that the resulting curve represents a composite load diagram. In so doing due regard must be paid to the difference in phase between the instantaneous voltages across the resistance and the inductance in series therewith. Starting with the fundamental fact that the current is the same throughout, we travel from the point H round the ellipse in a clockwise direction and meanwhile add the corresponding voltages. At H the alter-

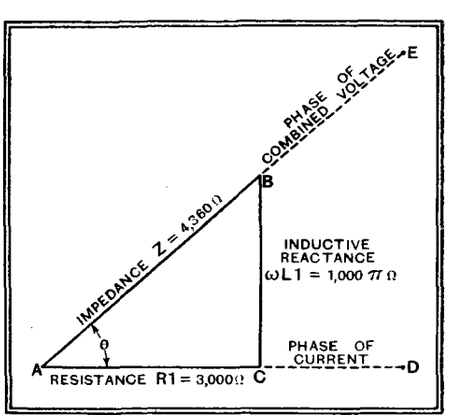

Fig. 7.—An alternative method of ascertaining impedance.

Valve Diagrams for Loud Speaker Loads—

nating voltage on the inductance is zero, but since the current is QH = 46 mA, there is a voltage across the resistance whose value is represented to scale by HX. Thus X is a point on the combined load diagram; similarly Y is another point thereon. At G the current is zero, so there is no resistive volt drop, but the inductive drop is QG = 145 volts. Hence G is a point on the load curve, as also is F. To obtain additional points on the curve take any point N on the ellipse and draw a horizontal line through it. LN is the voltage on the inductance and LM on the resistance, so we set off PN = ML. Similarly on the opposite side of the ellipse the voltage on the resistance is opposite to that on the inductance and we make JZ = ML. By following out this construction round the ellipse a new ellipse can be plotted, this being shown by the dotted curve. This is the combined load diagram for the resistance and inductance. Any point upon it represents the alternating voltage (horizontal) at the valve anode and the corresponding current through it and the load (vertical).

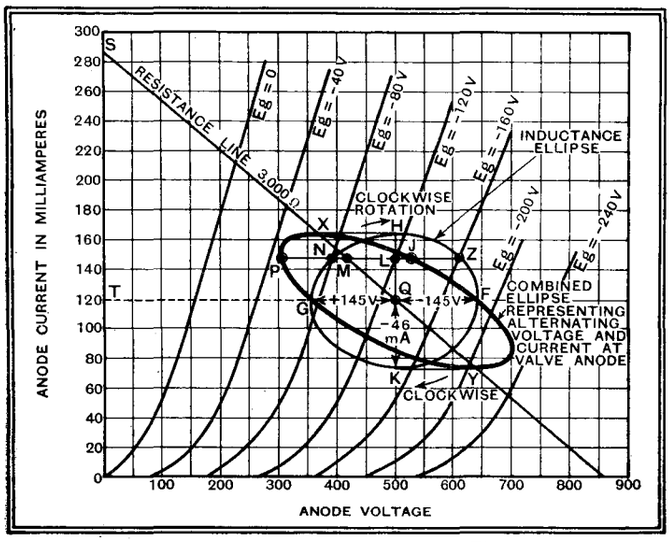

Fig. 8.—Diagrams for the loads shown in Figs. 6a and b.

We have yet to treat the case of a pure condenser load. Since the potential difference on a condenser is 90 degrees behind the current, this case is the same as the inductance provided we make the necessary change. We still have an ellipse, as in Fig. 5, but the current is calculated from the formula $I = \omega CE$, where C is the capacity of the condenser in farads. Thus with E = 100 volts, frequency = 50 c/s, and C = 1 microfarad the current $I = 2\pi \times 50 \times 10^{-6} \times 100 = 31$ milliamperes nearly, which would be the value HQ. Here, however, owing to the current being in opposite phase to that with an inductance, the ellipse is traversed counter-clockwise starting from the point K. Consequently, if we had a choke and a condenser in series, whose load diagrams were equal ellipses, the net result would be zero; i.e. there would be no load diagram. This, of course, corresponds to resonance of the system. To combine an inductance and condenser in series, the above procedure is employed, remembering that as we go round the ellipse the inductive and condenser voltages are in opposite phase.

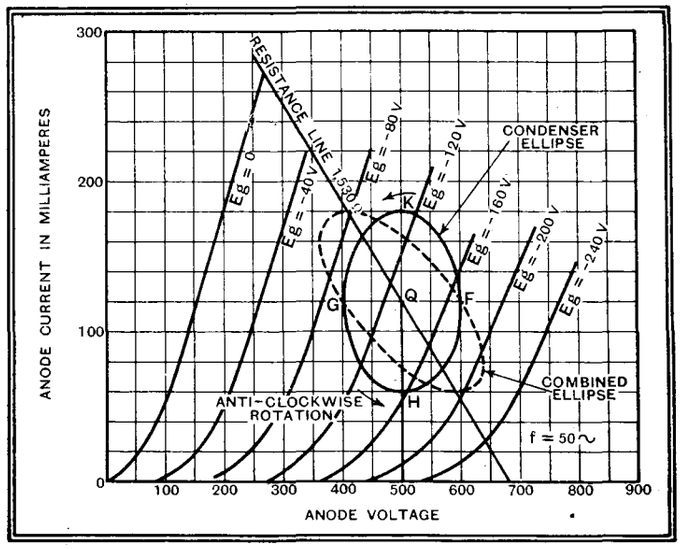

Fig. 9.—Load curves corresponding to a frequency of 50 c/s.

Thus a diagram similar to that of Fig. 8 is obtained, but at any particular time the parts of the diagram relating to inductive and condenser effects are vertically opposite. With a condenser, inductance and resistance the ellipses for the first two are equal but opposite as regards voltage at resonance. Hence they cancel out, leaving the resistance load line by itself, as shown by the line in Fig. 8.

We now come to the stage where the foregoing geometrical construction of the load ellipse is applied to the moving-coil loud speaker. Before proceeding further, however, we have to know the speaker impedance at various frequencies. The impedance of a moving-coil speaker varies considerably with alteration in frequency. For example, at 50 c/s it is substantially a condenser in series with a resistance. Somewhere between 200 and 300 c/s it is a pure resistance, whilst above this point it is an inductance in series with a resistance. The load ellipses corresponding to these three cases will all be different, so the best thing is to take data for each case and draw the corresponding diagrams. The impedances at 50, 210 and 5,000 c/s for a certain coil, referred to the anode circuit, are set out in the accompanying table.

At 50 c/s, owing to the large electromotive force induced in the coil due to its motion in the magnetic field and to its phase relative to the applied PD, the net effect is equivalent to a 2-mfd. condenser in series with the coil resistance of 1,530 ohms. At 210 c/s this condenser effect balances the inductive effect, thereby giving what is known as the electro-mechanical resonance point. There is, however, no pronounced hump in the current curve, since the coil resistance is quite high. Above this frequency the inductive effect preponderates. Due to eddy currents in the magnet core, the inductance falls with rise in frequency, but the resistance increases, as will be seen from the table. The values of resistance given therein include that due to sound radiation. If I is the coil current and Rr the electrical resistance due to sound radiation, the power radiated is I^2Rr.

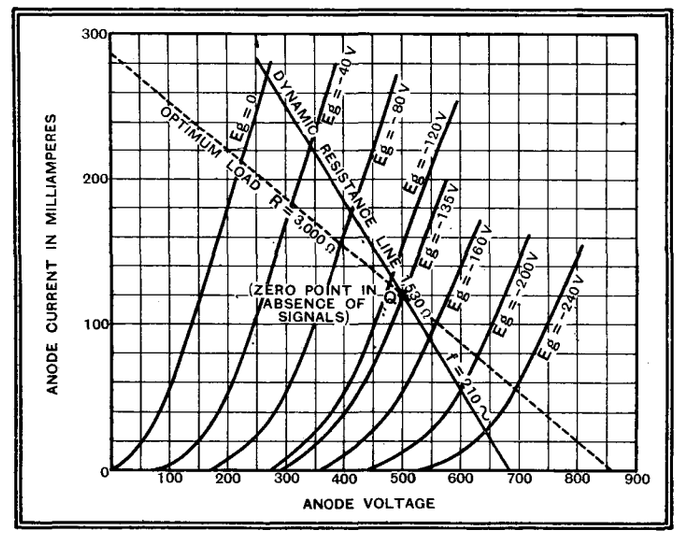

Fig. 10.—Load curves corresponding to a frequency of 210 c/s.

IMPEDANCES CORRESPONDING TO VARIOUS FREQUENCIES.

Frequency c/s.	Inductance (Henry).	Motional Capacitance (microfarad).	Resistance Ohms.
50	—	2	1,530
210	—	—	1,530
5,000	0.1	—	3,500

Valve Diagrams for Loud Speaker Loads—

Using the methods of constructing load lines described above, the three cases of the table are shown in Figs. 9, 10, 11. They have all been drawn to fall within the linear portions of the valve characteristics. In each instance the anode voltage change is 130 volts. For Fig. 9 the voltage on the condenser is 94, whilst the current to it is 59 milliamperes, the total anode circuit impedance of the condenser and series resistance being $Z = \sqrt{(R^2 + \frac{1}{\omega^2 C^2})} = 2{,}200$ ohms. In Fig. 11, owing to the relatively high value of the frequency, the inductive reactance and the eddy current loss in the magnet reduce the working current considerably. The voltage on the inductance is 86.7, the current 27.6 milliamperes, whilst the impedance is $Z = \sqrt{(R^2 + \omega^2 L^2)} = 4{,}710$ ohms, or more than double the value at 50 c/s. These calculations illustrate how the coil current at the higher frequencies is reduced by inductive reactance and losses in the magnet core.

Harmonic Distortion

When the EMF applied to the grid carries the valve beyond the linear part of its characteristics, the load curves are distorted and cease to be elliptical. The reader is doubtless aware that in practice a certain degree of distortion, which depends upon the sensitivity of the average ear, can be tolerated. As a working compromise 5 per cent. of harmonics can be regarded as the maximum permissible amount. In making this statement it is necessary to say clearly to what the 5 per cent. applies, i.e. to power or to current? Actually it applies to *current*, so that in a high quality system the harmonics must be at least $20 \log_{10} \frac{100}{5} = 20 \log_{10} 20 = 26$ decibels below the level of the fundamental. On the whole, if we keep the second harmonic 30 db. below the fundamental there can be little cause for complaint.

The point now arises as to how one can ascertain when the above condition is satisfied. In a rough way we can judge by aid of a feed meter in the output valve circuit, and by the resulting reproduction. This is hardly scientific, but it is quite effective nevertheless. A sine wave voltage from an oscillator at a certain frequency can be applied to the grid and filament of the power valve and the resulting output passed to an harmonic analyser. The grid swing at the given frequency can then be adjusted to a value at which the harmonics, as obtained from readings of the analyser, are 30 db. below the fundamental. By using a series of frequencies from 40 c/s upwards, the permissible grid swing can be found in each case and a curve drawn. At first sight one is apt to conclude that the swing will be the same at all frequencies, but this is not so, as can be seen from an inspection of the load curves in Figs. 9, 10, 11. For example, in Fig. 9 it is clear that when the AC anode voltage is increased the ellipse will break into the curved parts of the characteristics before the straight line of Fig. 10. At 5,000 c/s, represented in Fig. 11, the resistance is higher than that in Fig. 10, whilst the ellipse is much less than that in Fig. 9, owing to the smaller current. Also it happens that the value of the resistance (3,500 ohms) is quite near the optimum for the valve, this being 3,000 ohms. Thus the permissible grid swing will exceed that in either of the cases corresponding to Fig. 9 at 50 cycles or Fig. 10 at 210 cycles.

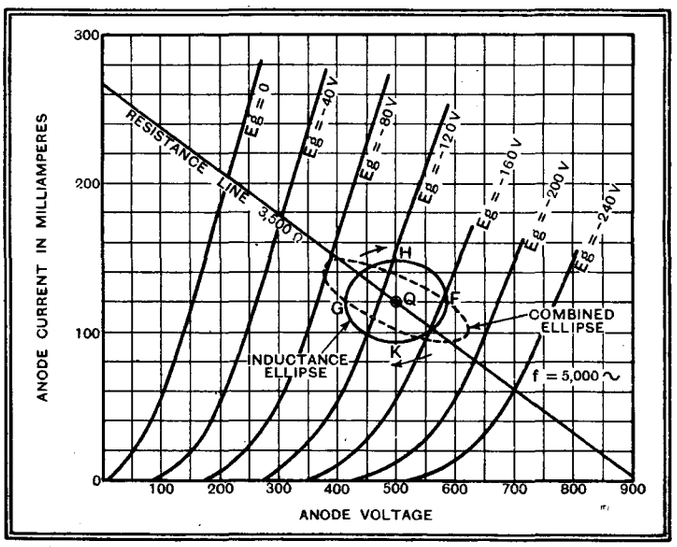

Fig. 11.—Load curves corresponding to a frequency of 5,000 c/s.

A Pure Inductance

Finally we can cite the case of a low inductance of negligible resistance. Assume the inductance to be 0.1 henry, we desire to consider the performance at 50, 210 and 5,000 c/s. The steady feed current to the valve as shown by the point Q in Fig. 8 is 120 milliamperes for a bias of −135 volts. It is clear that the alternating current cannot exceed 120 mA; in fact, long before it reached this value the curved parts of the valve characteristics would be encroached upon, with consequent generation of alien frequencies. If the maximum permissible value of the alternating current to avoid appreciable distortion is 60 mA, the anode voltage change due to the inductive drop at 50 c/s is $E = \omega LI = 2\pi \times 50 \times 0.1 \times 0.06 = 1.89$ volts approximately. This is a ridiculously small swing for a valve operating at 500 volts on the anode and −135 volts bias. The corresponding grid swing is about ±0.75 volt. At 210 c/s, the respective swings are about ±7.6 and ±3 volts, whilst at 5,000 c/s they are ±189 and ±75 volts. Beyond a frequency in the neighbourhood of 7,000 c/s, the grid swing and, therefore, the alternating current, is proportionately less owing to the necessity for avoiding grid current, and the curved parts of the characteristics. A rough graph illustrating the maximum permissible swing is shown in Fig. 12. It is to be clearly understood that this graph is based on the assumption of 60 MA as a maximum at the low-frequency end. To obtain points on the curve which accurately represent 5% harmonic content would necessitate a good deal of detailed work which is outside the scope and object of the present articles.

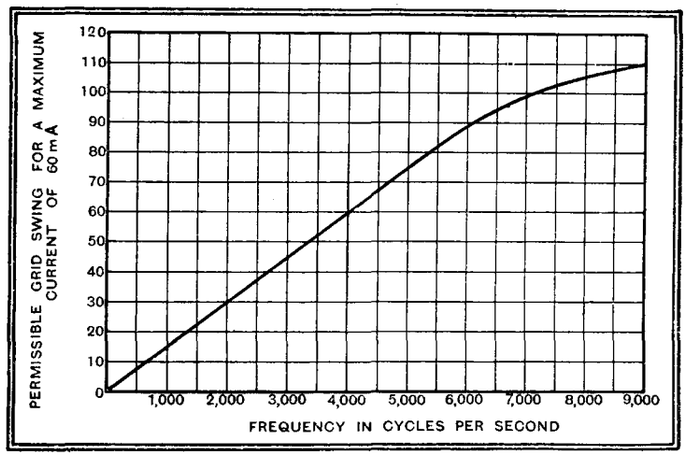

Fig. 12.—Relationship between permissible grid swings and frequency.

Beware the Oil Film

Excessive Trimming Capacity

TRIMMERS of the screw-adjusted compression type as used for IF transformers and similar purposes are sometimes inclined to be a little stiff, particularly if they have not been adjusted for some time. In these circumstances one may be tempted to introduce a spot of oil on to the mechanism.

This must be done sparingly, and, in fact, a touch of vaseline is preferable, because if any surplus oil is allowed to get on to the plate of the trimmer it will creep over the surface and cause an increase in the capacity.

This increase can be surprisingly large, particularly towards the minimum, which may be increased by several hundred per cent., even though the bare minimum of oil was used in the first place. J. H. R.

BROADCAST BREVITIES

By Our Special Correspondent

What Price Kilowatts Now ?

TRANSMITTING on high power is rather like throwing buns to a whale. Reduce the number of buns, or kilowatts, and life goes on pretty much the same, which is rather disconcerting.

In this frame of mind the B.B.C. engineers are contemplating their rather shady work of the past month. On March 1st the Little Nationals were officially working on 50 kilowatts. On March 8th, without a public announcement, they had dropped to 20 kilowatts, with surprising results.

No Riots

Scarcely a complaint has been received at headquarters.

We all know, of course, that service area is not directly proportional to aerial output, but by all the laws ever discovered there should be a considerable drop in the utility of a station when its power is more than halved.

Too Much Power ?

Is the world using too many kilowatts for wireless purposes? Is there an optimum level of power output, beyond which no further impression can be made on the sluggish ether?

The latest experience of the B.B.C. demands replies to these questions, and if an affirmative answer is forthcoming such stations as Droitwich, Luxembourg, and Moscow should be handed over as still-life models to Mr. Heath Robinson.

Reforming Irish Broadcasting

I UNDERSTAND that the appointment of Dr. T. J. Kiernan, Secretary to the Irish Free State High Commissioner's Office in London, to the directorship of Irish broadcasting, will lead to wholesale and badly needed reforms, including drastic changes in the production of programmes.

Actually there has been some slight improvement in the Athlone material during the past few months—all the more creditable in view of the fact that the station is being run by a permanent civil servant "borrowed" from another department.

A Fat Balance

Mr. S. MacEntee, Minister for Finance, is allocating an additional £2,000 for broadcasting purposes in the next Budget, and the total amount to be spent on the service next year will be £17,300. The I.F.S. Government, on the other hand, receives about £35,000 in licence fees and £10,000 in advertising revenue, so it cannot be said that money is being squandered on broadcasting.

Railway Rhythm

MIXING farce and fact is always a tricky business, and I hope that John Watt and Max Kester will "get away with it" on May 1st in a programme called "Railway Rhythm," which is being prepared in co-operation with the railways of Great Britain.

Three comedians, Claude Hulbert, Claude Dampier and Stainless Stephen, are to tour the railway systems to provide the entertainment side in a sound picture of work in the engine pits, goods depôts and signal boxes.

A Theme Song

"Railway Rhythm" will have a story, but its continuity will not be stressed, the important thing being the rhythm of the industry, which will be built up by the use of music (including a theme song, "Railway Rhythm"), actuality noises provided by the recording van and the synchronisation of scenes, words and music.

Talk and Talkers

IN the old days the B.B.C. talks programmes could be summarised in a few lines, one reason being that, as the speakers were such obscure personages, it was rarely necessary to mention them. Nowadays the speakers are, if anything, more imposing than their subjects, and a glance through the Talks booklet for April, May, and June leaves one wondering what eminent person has been left out.

Sir Walford Davies Again

The subjects range from "Freedom" to "Archæology," from "Conversations in the Train" to "At Home To-day."

To me, the best news is that Sir Walford Davies will return to the microphone after Easter in another Keyboard series, dealing with "Chords that Matter."

The booklet, *B.B.C. Talks*, containing full details, is issued free to listeners who send their name and address to the Publications Department, Broadcasting House, London, W.1.

Money for Television

WITHOUT having to beg for the money, the B.B.C. has been granted an additional £15,000 by the Treasury for the development of television. The sum is included in the amount of £2,210,000 for the maintenance of the broadcasting service for the year ending March 31st, 1936.

According to the report of the Television Committee, the cost of providing and maintaining the London television station up to the end of next year will approximate to £180,000, so the new grant is not perhaps so overwhelmingly munificent as appears at first glance.

Jubilee Broadcast

COMMANDER STEPHEN KING-HALL will be the commentator outside St. Paul's Cathedral on Monday, May 6th, to describe the arrival of the King and Queen for the Jubilee Thanksgiving Service. The occasion is officially described as "a Thanksgiving Service for the protection afforded to The King's Majesty during the Twenty-five years of his Auspicious Reign, ordered by the Lords of his Majesty's Most Honourable Privy Council in the Cathedral Church of St. Paul, London."

The running commentary and service will be broadcast to the world by GSF (19.82 metres) and GSG (16.86 metres), and electrical recordings will be transmitted at 2 and 9 p.m. on May 6th and 5.15 a.m. on May 8th. The actual broadcast begins at 10.5 a.m. on Jubilee Day.

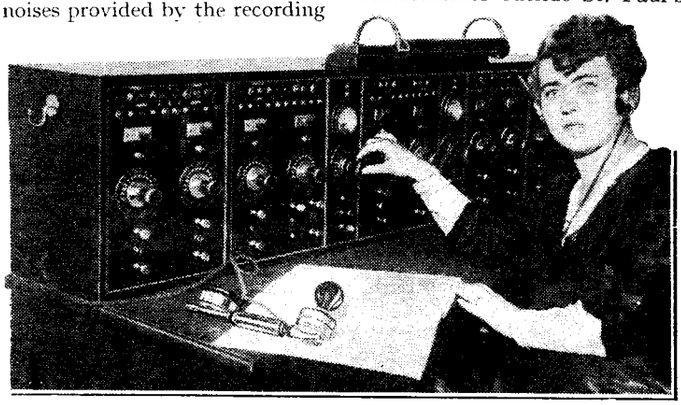

THE ONE AND ONLY woman operator of a dramatic control panel in Europe is Madame Makowiecki, whom we see above in a studio annexe at Polskie Radio, Warsaw. Madame Makowiecki controls eleven studios and thus has the last word every time.

LORD BRIDGEMAN, a Governor of the B.B.C. for two years and now appointed Chairman. The vacancy on the board has been filled by Mr. H. A. L. Fisher, Warden of New College, Oxford.

One Bobent, Please

LAST week a B.B.C. announcer, with commendable fortitude, laboured through the second news bulletin with a cold in the head that gave a fresh complexion to the Disarbabent talks and introduced a new statesman, Sir Johd Sibod.

Halfway through the recital the ban at the bike blew his nose, first having turned down the volume control. Unfortunately, on resuming he omitted to turn the volume control up to its original point, and the bulletin became still more difficult to follow.

Understudies

Next year the B.B.C. will have more than £2,000,000 to play with, so let us hope that arrangements will be made for providing understudies at short notice. Painful as the circumstances were the other evening, they would have been ten times worse with television.

Near Enough

FROM the *Times* Personal Column:—

Small Flats.—Ideal position, quiet; just off Portland Place, one minute B.B.C. . . .

Ensuring fresh, clean programmes, untouched by hand. . . .

Readers' Problems

THESE columns are reserved for the publication of matter of general interest arising out of problems submitted by our readers
Readers requiring an individual reply to their technical questions by post are referred to "The Wireless World" Information Bureau, of which brief particulars, with the fee charged, are to be found at the foot of this page

Cause and Effect

IF instability (or uncontrollable self-oscillation) is produced when the HF or IF circuits of a receiver are brought into tune with one another, we have a certain indication that an excessive amount of interaction exists between the various circuits, or possibly that the amount of amplification aimed at is greater than the natural limit imposed by the residual anode-grid capacity of the valves. From the wording of a letter in which information is asked regarding the lack of sensitivity in a superheterodyne IF amplifier, we are inclined to think that this fact is not fully appreciated by the writer.

Before going any farther in his attempt to improve the sensitivity of his receiver, our correspondent must first endeavour to locate and to remove the cause of instability.

Assuming that the design followed is a good one, the possible causes of the trouble are practically limited to insufficient inter-circuit screening or to inadequate decoupling.

Twin Wave-traps

WE are asked to say whether it is theoretically possible to use a pair of wave-traps for eliminating or minimising interference from a twin-station local transmitter.

Not only is it possible to employ the scheme suggested by our correspondent, but it is actually fairly well known, and has already been described in our pages. Twin wave-traps are often employed for preventing second-channel interference in superheterodynes, and are equally applicable to reducing interference in straight receivers. The trap circuits are normally connected in the manner shown in Fig. 1.

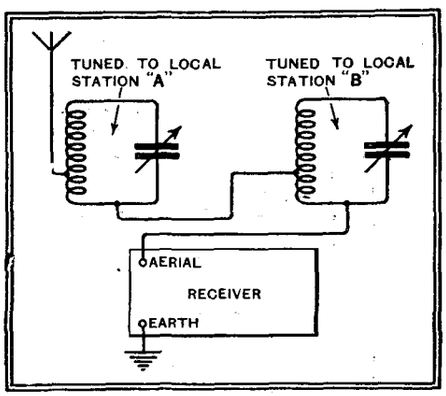

Fig. 1.—Multiple wave-traps; method of reducing interference from two stations.

Microphone Amplifiers

IT may be taken almost as an axiom that the better type of microphone (with a good frequency characteristic) will not give sufficient output for full-volume reproduction when disconnected to the pick-up terminals of the average radio receiver. Normally, the output of a pick-up is considerably greater than that of a high-quality microphone, and the latter instrument will usually need two stages of LF amplification preceding the output valve.

A correspondent who wishes to use a microphone in conjunction with his receiver would therefore be well advised to use an instrument of the ordinary carbon pattern, and, before making a choice, to ascertain from the makers whether his receiver will provide sufficient amplification.

Transformer-less HT Eliminator

A READER who "understands that the ban on the use of eliminators worked from AC mains without the intermediary of a transformer has now been removed" asks us to show him how to connect a Westinghouse rectifier directly to 110-volt AC mains in such a way that the rectified voltage will be appreciably higher than the supply.

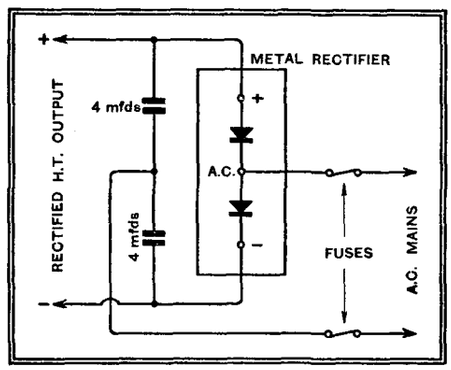

Fig. 2.—Voltage-doubling rectifier for direct connection to the mains.

While it is true to say that an eliminator or AC mains set can now be made to satisfy the regulations without an isolating transformer, it should be pointed out that fairly extensive precautions are still necessary if infringement of the rules is to be avoided.

A suitable circuit for our reader's requirements is given in Fig. 2. This will provide a rectified DC output of roughly twice the input AC voltage.

Amplified Interference

ALTHOUGH there can be no doubt that improvement in high-note response does much to increase the naturalness of reproduction, it must be admitted that in certain circumstances an extension of frequency response in an upward direction is not always an unmixed blessing. For example, a correspondent who has recently added a high-note tweeter to his set is disappointed to find that the background noise, which originally "was not particularly noticeable," is now intolerably loud. From the fact that the interfering noises seem to have changed their character it is thought that the high-note speaker may possibly be at fault, and our opinion is asked on this matter.

When the upper register is reproduced at full strength it will often be found that a background of interference assumes an entirely different character, the noise appearing much sharper and of greater intensity. From our reader's description of the effect we do not think that the speaker is at fault.

In the circumstances it would be advisable to take all possible steps to minimise interference, and, if success is not obtained, to provide some means of restricting high-note response at those times when the interference is particularly troublesome.

Intermittent Breakdown

WE are asked to give some suggestions on the use of a milliammeter in tracing a troublesome intermittent fault which manifests itself occasionally by complete interruption of signals.

In the first place, our querist should be warned that a good deal of patience will be required. The milliammeter should be connected in turn in each anode circuit, and when the interruption takes place it should be noted whether the reading of the instrument has changed. If it has, the fault is likely to be associated with the grid or anode circuit of the valve concerned. For our present purpose it may be remembered that the "oscillator anode" of a modern frequency-changer counts as an anode.

Remember the Volume Control

IN asking us to say what may be deduced from a tabulated list of the anode current readings of his receiver, a querist draws our attention to the fact that, although the reading applying to the IF valve is microscopically small, the general sensitivity of the set appears to be normal.

As the readings are utterly inconsistent with the results obtained, we are inclined to think that this reader has measured anode currents with the volume control set in the "low" position—or else at a time when a strong incoming signal was being dealt with by the receiver, which may, in practice, amount to very much the same thing.

Some manual controls and all automatic controls operate by varying the grid bias of HF or IF valves, and a reading of current is more or less meaningless if the valves concerned are biased to an abnormally high value. As a rule, measurements should be made with the manual control at maximum and with the aerial disconnected or, at any rate, with no incoming signal.

The Wireless World

INFORMATION BUREAU

THE service is intended primarily for readers meeting with difficulties in connection with receivers described in *The Wireless World*, or those of commercial design which from time to time are reviewed in the pages of *The Wireless World*. Every endeavour will be made to deal with queries on all wireless matters, provided that they are of such a nature that they can be dealt with satisfactorily in a letter.

Communications should be by letter to *The Wireless World* Information Bureau, Dorset House, Stamford Street, London, S.E.1, and must be accompa[illegible] by a remittance of 5s. to cover the cost o[illegible] service.

Personal interviews are not given by the technical staff, nor can technical enquiries be dealt with by telephone.

New Apparatus Reviewed

Recent Products of the Manufacturers

MICROPHONE PARTS

READERS who would like to construct the transverse-current microphone described in *The Wireless World* of January 11th last, but hesitate to tackle the wood work, will be interested to learn that all the parts can be obtained from A. Hinderlich, 2, Bridge Road, Willesden, London, N.W.10. It only remains to assemble them, glue on the mica diaphragm, and fill with carbon granules.

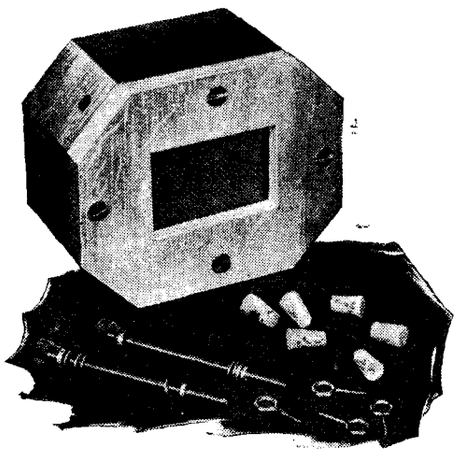

Hinderlich kit of parts for a transverse-current microphone.

The parts supplied are: the main wood block 2in. thick with the side and top recesses made and all holes drilled; the spacing piece and the front cover plate; the back of which is cut away to take the wire gauze. Included also are four mica diaphragms of the correct size and thickness; corks for the holes; brass rods with nuts, washers, and terminals; and, finally, a piece of glass-paper for finishing off the edges after assembly. The granules and the two carbon rods only are required to complete the microphone.

The complete kit mentioned above costs 4s. 6d., but the woodwork alone can be obtained for 3s. The parts are well made and comply with the specification in every detail.

POLAR-N.S.F. CONDENSERS

WINGROVE AND ROGERS, Ltd., Arundel Chambers, 188-189, Strand, London, W.C.2, have effected a slight improvement in the fixing of the wire ends on the Polar-N.S.F. tubular condensers. The connecting wires are now secured in the ends of the tubular case by a hard wax, in addition to the original brass disc. We find the new design much more satisfactory for amateur use, as it is possible to bend the wires backwards and forwards without loosening the anchorage. The wires will fracture before any trace of looseness appears at this point.

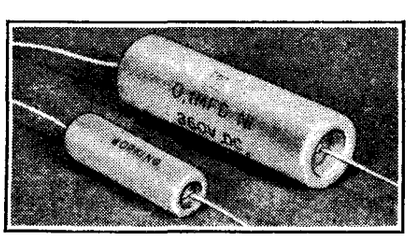

Improved fixing of the end wires is now adopted in Polar-N.S.F. tubular condensers.

The new fixing is being adopted for all models in the range, but the prices remain unchanged.

FOX AMPLIFIER

THIS unit, which is made by Fox Industrial, Ltd., 29, Dingby Place, City Road, London, E.C.1, although described as an amplifier, is actually a wireless receiver, for it embodies tuning coils and an HF stage, though the tuning is effected by pre-set condensers mounted in the coil containers. It covers the medium-wave-band only.

Three valves are employed in a I-V-I circuit; the detector is resistance-capacity coupled to the output valve, from which about 2.7 watts undistorted power can be obtained. A full-wave rectifying valve supplies HT at about 400 volts, and, as the output stage requires some 250 volts only, the surplus can be utilised to energise a moving-coil load speaker or to illuminate a neon lamp for television reception of the present 30-line system.

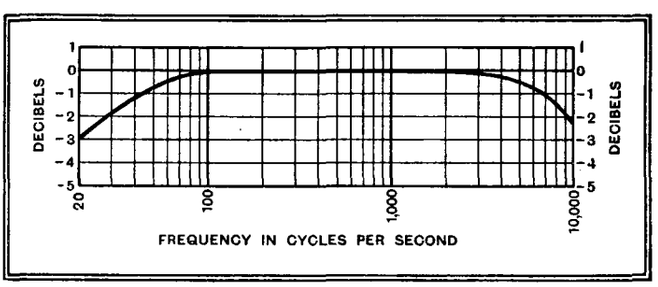

Fox Industrial amplifier unit and its LF response curve.

This is one of the principal functions of the unit, as the LF amplifier has a particularly good frequency characteristic, though the gain is not high, being of the order of 200. Access to this portion of the equipment is provided by a plug and jack that disconnects the HF circuit and adjusts the grid bias of the detector for amplification purposes. It is a unit that will appeal to the experimenter, not only by virtue of its good frequency characteristic, but also for the reason that it provides a high operating voltage for external apparatus if required.

The price is £5.

CLIX AIR-SPRUNG VALVE HOLDERS

THE range of Clix Air-sprung anti-microphonic chassis-mounting valve holders hitherto made in the four- and five-pin types has been extended to include a seven-pin model. In this design the sockets are assembled on a thin disc of bakelised material sandwiched between two stouter discs. Several slots are cut in the inner one to enable the sprung disc to vibrate freely.

In order to preserve the flexibility of the mounting solid wire must not be used, of course, for wiring the valve holder; stranded wire or flex is best for this purpose.

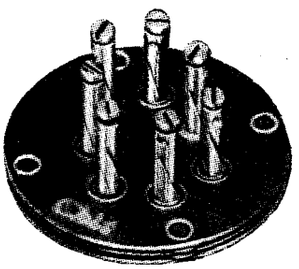

The underside of the Clix new seven-pin anti-microphonic Air-sprung valve holder; model fitted with terminals.

The new seven-pin model costs 1s. 4d. with terminals, and 1s. 1d. without, and the makers are Lectro-Linx, Ltd., 79a, Rochester Row, London, S.W.1.

BULGIN MAINS RESISTANCES

IN the description of this new Bulgin product which appeared in our issue of March 15th last, it should have been mentioned that the rating of the resistances is based on the number of 13-volt valves they will accommodate. The range made, therefore, caters for from three to seven valves of 13 volts each, so that a four-valve set, one of which is a 26-volt rectifier, for example, requires a five-valve resistance unit.

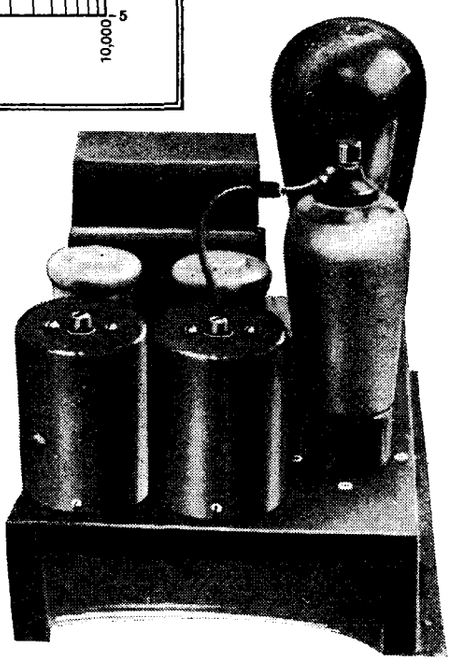

FOUNDATIONS OF WIRELESS

Part XVII.—Reaction and Sidebands

It is shown that the application of reaction adds enormously to the sensitivity and selectivity of the simple single-valve set discussed in the last instalment, but that these gains are partly offset by losses in other directions.

By A. L. M. SOWERBY, M.Sc.

IN Part XVI we made acquaintance with the Miller Effect, and traced out qualitatively the manner in which the high-frequency voltage at the anode of a valve reacts, through the capacity between grid and anode, upon the grid circuit. We were driven to the unwelcome conclusion that the energy fed back to the grid through this capacity could not be prevented from being so phased that it tended to damp out and neutralise the signal-voltage received from the aerial, and that we could do nothing but minimise this loss as far as possible. In the end we were therefore left with a certain amount of damping, and it is found in practice that with the average triode detector the unavoidable Miller feed-back is equivalent to connecting a resistance of some 50,000 ohms or less in parallel with the tuned circuit.

By adopting an arrangement like that of Fig. 92 we can introduce a new means, this time entirely under our control, for feeding back energy from the anode to the grid circuit. We now have the single-valve set discussed in Part XVI, with the addition of the coil L2. The juxtaposition of this to L1 indicates that in the actual set the two are coupled together by being placed in proximity, while the arrow running through them indicates that their relative positions can be adjusted as required.

How Reaction Works

Part of the high-frequency current flowing in the anode circuit will pass direct to cathode through C3, and part will flow through L2, the capacity C4 across the telephones, and the anode battery. This latter portion, in its passage through the coil, sets up round L2 a high-frequency field which, in passing also through L1, induces a voltage in the latter. By connecting L2 in the right sense this voltage can be made either to assist or to oppose the voltage initially present, the effect in either case becoming more marked as L2 is brought closer to L1. We have already commented upon the unwelcome effects produced by a feed-back in such phase as to oppose the signal-voltage; we will now consider some of the effects that arise when the feed-back assists the original voltage in the grid-circuit.

Since the amount of energy fed back can be controlled by adjusting the coupling between the two coils, let us begin by supposing that this adjustment has been made in such a way that the signal-voltage across L1 has the same value, no matter whether the valve is connected to it or not. This implies that the reduction of voltage occasioned by grid-current damping and by the energy fed back through the anode-grid capacity is exactly offset by the voltage fed back from L2.

We have already seen that the damping due to the valve can be exactly duplicated, both in its effect in reducing the voltage across L1 and in its effect of flattening the resonance curve of the tuned circuit, by connecting a resistance across the tuning condenser. From our knowledge of high-frequency resistance we are aware that the effect of any parallel resistance can be duplicated by opening the tuned circuit (between L1 and C1) and inserting a series resistance of equivalent value. And now we see that the valve-damping can be neutralised again by a suitable coupling between L2 and L1.

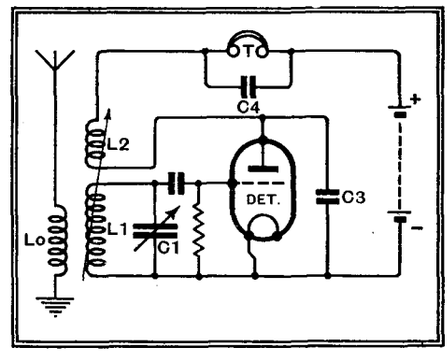

Fig. 92.—Conventional single-valve set with adjustable reaction.

We conclude that by feeding into it energy from the tuned circuit of a valve it is possible to *neutralise resistance* in a tuned circuit connected to its grid. This neutralisation of resistance is in this country called *reaction* (to be sharply distinguished from *reactance*!) and in America is called "regeneration."

There is no ready means, when handling a receiver built to the circuit of Fig. 92, of telling when the detector damping has been exactly offset by the effects of reaction. If L2 is coupled a little too loosely to L1 some, but not all, of the detector damping will be neutralised, and the tuned circuit will behave as though its magnification were rather lower, or its high-frequency resistance a little higher, than the true value in the absence of the valve. If the coupling is made a little too tight the detector damping will be more than neutralised, with the result that the tuned circuit will behave as though its magnification were a little higher, and its high-frequency resistance a little lower, than its normal value. There is, in fact, no line of demarcation between "imaginary ohms" arising through detector damping and "real ohms" due to the resistance of the wire with which the coil is wound and losses in the dielectrics associated with it—reaction from the anode circuit of the valve can neutralise both alike.

Restoring Lost Power

The truth is, of course, that reaction does not neutralise resistance in any strictly literal physical sense. The sole characteristic of resistance is its absorption of power; if, therefore, we supply power from the anode circuit of a valve the circuit in which that resistance is located behaves as though it had lost some of its resistance. The valve is used as a source because it is only by making the voltage itself (in the grid circuit) control the power used to enhance it that the two can be locked unalterably together in the required phase.

In discussing tuned circuits in an earlier Part we saw that reduction of high-frequency resistance increases both the magnification and the selectivity of a tuned circuit. With the aid of a valve to provide reaction we are now in a position to adjust the resistance of the tuned circuit L1C1 to any value that takes our fancy, simply by approaching L2 cautiously towards L1 until the resistance has been reduced to the desired extent. As we do this the voltage developed by the signal across L1C1 will steadily rise and the tuning will become steadily sharper.

The effect on the tuned circuit can best be visualised with the aid of a series of resonance curves. In Figs. 93 and 94 the voltage across L1C1 is plotted against frequency for a number of values of magnification. A glance will show that as the magnification is increased by the application of reaction the signal-voltage rapidly rises[1] and the sharpness of tuning, as

[1] The relative heights of the peaks are calculated on the basis of constant injected voltage. This ignores the reaction of the L1C1 upon Lo, the aerial primary.

Foundations of Wireless—

measured by the ratio of the voltage at resonance to that developed a few kilocycles off tune, becomes greater.

The difference between the two sets of curves in Figs. 93 and 94 is purely one of scale; in the former the frequency-scale extends only to 6 kc/s on either side of resonance, so that only the peaks of the curves are plotted. In the latter the be-

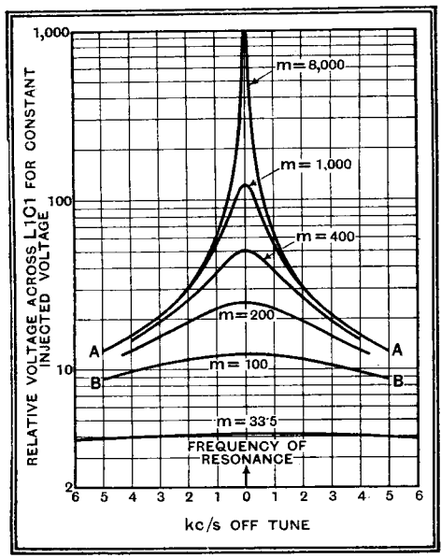

Fig. 93.—Showing relative voltage at resonance (height of peak) developed across L1C1 for various coil magnifications *m*.

haviour of the circuits is shown over a range of 60 kc/s each way from resonance. In both cases the lowest curve is a fair representation of the behaviour of a tuned circuit of normal high-frequency resistance connected to a detector. With the reaction coil out of use the circuit assumed has $L = 155\ \mu H.$, $r = 10\ \Omega$, and is supposed to be tuned to 1,000 kc/s. Detector damping across it is taken as 50,000 Ω. For the tuned circuit alone $m = 98$, $R = 95{,}000\ \Omega$; with detector damping in parallel the total dynamic resistance is reduced to 32,600 Ω, making the equivalent HF resistance 29.2 Ω and reducing the effective magnification to 33·5. The curve next in order ($m = 100$) represents the same tuned circuit with the effects of detector damping almost exactly offset by the judicious application of reaction. Successive curves show the effect of more and more reaction, culminating in the extreme case where the magnification has been increased to 8,000, which is about the highest value known to have been reached, and held, by this means. It corresponds to the neutralisation of all natural resistance of the circuit except for a small residue of about one-eighth of an ohm.

A Flywheel Effect

At first sight it would appear that the reduction of circuit resistance, even to such very low limits as this, was all to the good, since it would increase both the sensitivity and the selectivity of the receiver. If we had to receive a simple carrier wave this conclusion would be true, but we must remember that the signal from a broadcasting station consists of a *modulated* carrier. As we have seen, the modulation consists in a variation in the amplitude of the carrier at the frequency of the musical note it is desired to transmit. We know also that if a tuned circuit had no resistance at all, any oscillation that might be set up in it would persist, unchanged in amplitude, for ever. Such a circuit would evidently be quite incapable of following the rapid variations in amplitude of a modulated carrier; it would maintain indefinitely an amplitude equal to the maximum of the received signal.

It follows, therefore, that as we approach towards zero resistance by a greater and greater application of reaction, the voltage across the tuned circuit will tend more and more to "hang," following with greater and greater sluggishness the variations due to the modulation. For the highest audible notes the high-frequency voltage has to change in amplitude most rapidly; as the resistance of the tuned circuit is decreased these will therefore become weak and vanish at a value of resistance still high enough to enable the low notes, for which the variations in amplitude of the carrier are proportionately slower, to remain substantially unaffected.

The high, sharp peak of a very low-resistance circuit such as that giving the curves "$m = 8{,}000$," therefore, tells us that high modulation-frequencies cannot be followed. On the other hand, the flatter curves such as that for $m = 100$ indicate a resistance high enough for any current through the circuit to die away rapidly unless maintained by a driving voltage, thus enabling the voltage-variations across L1C1 to be a faithful copy of the signal as received from the aerial.

By regarding the modulated wave from a slightly different point of view, the relationship between sharpness of tuning and the loss of high audible notes can be shown to be very much more intimate than has been suggested. Strictly speaking, it is only an exactly recurrent phenomenon that can be said to possess a definite frequency. The continuous change in amplitude of the carrier wave in response to modulation makes the high-frequency cycle of the modulated wave non-recurrent, so that in acquiring its amplitude variations it has lost its constancy of frequency.

A mathematical analysis shows that if a carrier of $f1$ cycles per second is modulated at a frequency $f2$ cycles per second the resulting modulated wave is exactly equivalent to three separate waves of frequencies $f1$ $(f1 - f2)$, and $(f1 + f2)$. It is not easy to perform the analysis of the modulated wave into its three components by a graphical process, but the corresponding synthesis, adding together three separate waves, requires nothing more than rather extensive patience.

Fig. 95 shows at (*a*), (*b*), and (*c*) three separate sine waves, there being 25, 30, and 35 complete cycles, respectively, in the length of the diagram. If the whole period embraced by the time-scale of the diagram is one-thousandth of a second, these three waves correspond to a carrier (*b*) of 30 kc/s, and the two accompanying waves of frequencies $(30 + 5)$ and $(30 - 5)$ kc/s produced by modulating it at the high audio-frequency of 5,000 cycles. By adding the heights of these curves, point by point, the composite curve at (*d*) is obtained. There are in its length 30 peaks of varying amplitude, and the amplitude rises and falls five times in the thousandth of a second represented on the figure. It is therefore identical with what we have come to know as a 30 kc/s carrier modulated at 5,000 cycles.

Theory of Sidebands

Thus, a carrier modulated at a single audio-frequency is equivalent to three simultaneous signals; the unmodulated carrier itself and two associated steady frequencies spaced away from the carrier on either side by the frequency of modulation. In the case of a musical programme, in which a number of modulation-frequencies are simultaneously present, the carrier is surrounded by a whole family of extra frequencies. Those representing the lowest musical notes are close to the carrier on either side, those bringing the middle notes are further out, and the

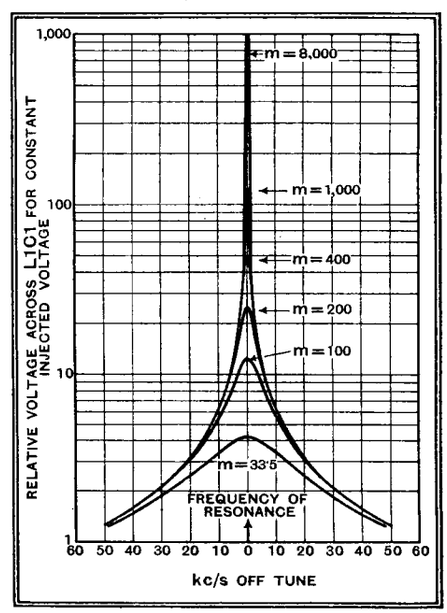

Fig. 94.—Extension of Fig. 93, showing the voltages across L1C1 when tuned exactly (peak) and when distuned to various extents.

highest notes are the furthest removed from the carrier frequency. The spectrum of associated frequencies on either side of the carrier is called a *sideband*, and as a result of the presence of these a musical programme, nominally transmitted on a (carrier) frequency of 1,000 kc/s, will spread over a band of frequencies extending from about 993 to 1,007 kc/s.

We now have a direct relationship between the selectivity of a tuned circuit and its ability to receive the highest notes likely to be present as modulation on the

Foundations of Wireless—

carrier. If the resonance curve of the circuit is not substantially flat over a central portion wide enough to include the whole of the required sidebands, high notes will be attenuated—they will be quite literally tuned out owing to over-selectivity. In the curve for $m = 8{,}000$, in Fig. 93, the sidebands corresponding to a modulation frequency of 5,000 cycles are shown, at points AA, as being transmitted at about 1.3 per cent. of the central carrier frequency. Lower notes are more fully transmitted, higher notes even more greatly attenuated. The result will be "woolly" and more or less unintelligible speech, and "boomy" music. For a tuned circuit in which $m = 100$, however, 5,000-cycle notes are passed at 70 per cent. of the carrier amplitude (BB in Fig. 93).

It is clear from these considerations that high selectivity is not altogether an unmixed blessing in the reception of telephony, and that too great an application of reaction will sharpen tuning to such a point that the quality of the received programme suffers badly. How far reaction should be pressed in receiving a station is largely a matter for individual compromise, but it is clear that if a sensitive receiver is required we shall have to find some means of increasing sensitivity that does not involve the tremendous accentuation of selectivity that accompanies excessive use of reaction.

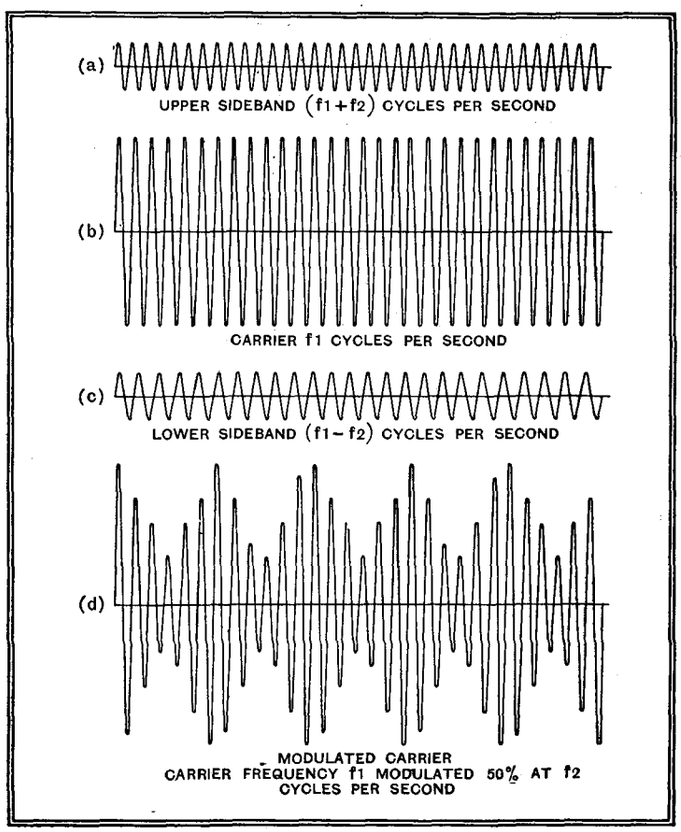

Fig. 95.—Showing the relationship of a modulated carrier (*d*) to its three components.

Random Radiations

By "DIALLIST"

The B.B.C. Has a Word for It

WHILST others have been toying tentatively with a variety of possible names for the user of a television receiver, the B.B.C., going quietly to work, has produced its own word. There has been no official pronouncement on the subject; the new term has just been slipped unobtrusively into news items, and so on, every now and then. Possibly you have heard it and know what the B.B.C.'s chosen word is. In case you haven't, and don't, it is "televiewer."

To my way of thinking, it's not a very happy selection, for, like "television," it is a mongrel word of the worst type, the "tele" being Greek and the "viewer" a French-English hybrid of Latin extraction. One of the B.B.C.'s jobs should be to preserve the purity of English, and "televiewer" does not commend itself as a desirable addition to our vocabulary. I don't see very much wrong with "looker" or "looker-in." They're English enough, and why use four syllables when two or three suffice?

Broadcasting in South Africa

ALL those who have read Sir John Reith's report on broadcasting in South Africa must agree that it is a masterly piece of work. The South African authorities are to act upon it when the licence of the S.A.B.C. expires, as it will do in two years' time. One very sound point in Sir John's recommendations is that broadcasting in South Africa should be conducted neither by a Government department nor by a company, but by an organisation independent of direct Government control, and acting solely for the public.

In many European countries broadcasting is almost entirely in the hands of the Government, the result being that it is too often used for political and propaganda (or improper-ganda) purposes. It is largely because of this that the nations of Europe find it so difficult to agree about wavelength allocation, limitation of output power, and so on, when they meet to discuss "plans" at Geneva or Prague or Lucerne.

Berlin Makes a Start

THE Berlin television service is already under way, though nobody except an experimenter here and there can receive its transmissions, for there are no high-definition receivers on sale in Germany yet. One announcement made at the opening of the Berlin station struck me as something that might have been better put. "What has happened to-day in Berlin is, in practice, what Great Britain proposes to do in the autumn," said Herr Hoffman, the Chief Engineer. But is it?

The Berlin service is on the 180-line system. I understand, too, that there is a good deal of flicker about the images. We shall make a start with not less than 240 lines, and, from what I have seen of recent demonstrations, I don't think there will be any flicker worth talking about.

Worth Waiting For

Surely it is better to wait a few months for something really good than to put on a second-rate service just for the sake of being first in the field! Better, too, to defer the start of the service until at least a few suitable receiving sets appear on the market. Actually, if we had wished to rush in and stake a claim to be first in the television field we could have opened a 180-line service for the London area on the very day after the Television Committee published its report. The Crystal Palace station was there, complete to the last terminal, and it could have come into action at once. But there was absolutely no point in doing anything of the kind.

When the London service is launched it will undoubtedly be the very best thing that can be given. Both the transmitting people and the makers of receiving apparatus will have had ample time for experimental and development work. Good receiving equipment should be available at various prices. In other words, our service won't go off at half-cock. When it comes it will have been well worth waiting for.

A Word of Warning

Just one word of caution to readers, which they may well pass on to their friends. The next few months are certain to produce a crop of good, bad and indifferent television receivers. Some of them will be real "flat-catchers," designed to extract money from the pockets of those who harbour the quaint belief that you can get something for almost nothing.

Television receivers, as they now come along, will be tested and reported upon by *The Wireless World*. The wise man will read those reports carefully and make his choice accordingly.

History on Show

TWO very interesting stands at the Ideal Home Exhibition are those of H.M.V. and the Marconiphone Company. Each contains displays of wireless apparatus dating back for twenty-five years or more. On the H.M.V. stand is a 1911 receiving set with external horn and the auxetophone, the first public-address gramophone, in

Random Radiations—

which compressed air was employed to drive out the sound.

The Marconiphone people show the actual apparatus used by Marconi for transmitting messages from the Needles to Bournemouth in 1899. They have also the microphone used by Dame Nellie Melba when she made her historic broadcast from the Chelmsford station. Half an hour spent at these stands helps one to realise the amazing progress that wireless has made in its short career and the vast amount of work that has been necessary for its development.

A Landmark in Broadcasting

How many readers, I wonder, remember Dame Nellie's broadcast mentioned in the last paragraph? It took place in 1920, and it marked a real turning point in the history of broadcasting—even though it happened a couple of years before a broadcasting service was inaugurated in this country. The great majority of the big people in the musical world were violently opposed to the idea of broadcasting. Almost alone, Melba saw its possibilities and gave her hearty co-operation. It was largely through her influence that many other artistes abandoned their obstructive attitude.

I remember receiving that first broadcast of hers on a quaint home-made set. It contained five "R" valves—2 HF, detector and 2 LF—and, though completely innocent of grid bias (save that of the positive variety used for "holding down" the HF valves), produced what seemed like terrific volume from its loud speaker. Friends who came in to hear Melba assured me that they might have been listening to her in the Albert Hall! We were not critical of quality in those days.

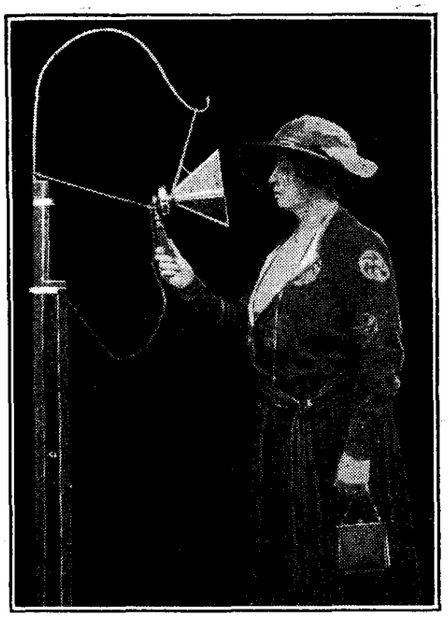

A photograph of Dame Nellie Melba at the microphone during her broadcast from the Marconi experimental station at Chelmsford, on June 15th, 1920.

Letters to the Editor

The Editor does not hold himself responsible for the opinions of his correspondents

Frequency Separation

REFERRING to the latter end of the letter under the above heading, by Mr. A. H. Wickham, in your issue for March 15th, one can only assume that your correspondent is referring to sets of nondescript manufacture, as to the writer's knowledge receivers of reputable make are correctly tuned and ganged individually, even when manufactured at the rate of hundreds a day.

Obviously they are not adjusted on every wavelength, but they are calibrated on a selection of wavelengths which covers the whole band, and the error is not great.

There is no doubt, of course, that greater frequency separation between stations would be invaluable, but as it means sacrificing a number of stations in Europe it does not seem likely to be practical politics for many a long day. J. BAGGS.

Alkrington,
Manchester.

P.S.—Is it not usual to consider that the top note of the piano is 4,096 cycles, and not 3,500, as stated by your correspondent?

Loud Speaker Response Curves

IN commenting on the loud-speaker data published in your issue of March 29, we should like first to offer our most sincere congratulations on your enterprise in installing proper apparatus—which is expensive in both time and money—for the purpose.

We appreciate on reading your description that you do indicate the danger of assuming that one response curve really describes the performance of a speaker. We agree fully with your reservations on the matters of distortion at low frequencies, transient response and so on.

But we should like to emphasise even more than you have done the fact that one axial curve does not even give as much information as is desirable about frequency response.

We show in the accompanying diagram a tracing of your curve for our speaker, superimposed on the mean forward response curve—you will remember that your technical staff examined this latter curve and agreed the method of calculation. (Note that we have corrected the mean curve for use on a 3ft. baffle.)

It is at once obvious that the "crevasse" at 2,000 c/s is not nearly so serious as appears from the axial curve, which is explained by the fact that this dip is due to the cone being a cone and not a disc. The radiation off the axis at 2,000 c/s is up to normal; it is only the "beam" that is 15dB down.

Secondly, the excellent response at 10 kc/s on your curve is not really justified; although it exists on the axis, the *mean* response is undoubtedly down at this frequency—our only consolation is that it is not so far down as in most speakers.

We feel fairly sure that your staff would find that to take mean curves for all speakers would involve prohibitive labour; but we do beg that you will take curves of a few speakers at, say, 0, 30°, 60°, and 90° off the axis, and print them on the same sheet, so that your readers will have the point really brought home to them.

We should also just like to remind readers that the use of a 3ft. baffle itself involves a loss of, roughly, 1dB at 200 c/s, 3dB at 100, 5dB at 80, and 9dB at 50 c/s.

HARTLEY TURNER RADIO, LTD.
Isleworth.

Electrical Interference

WITH reference to your Editorial Comment, "Electrical Interference" (*The Wireless World*, Vol. XXXVI, No. 11), which, in my opinion, should receive a hearty welcome from all who are interested in the progress of radio communication, may I be permitted to quote my comments during the discussion on "The Interference of Electrical Plant with the Reception of Radio Broadcasting," read by Mr. A. Morris, before the Wireless Section of the Institution of Electrical Engineers on November 22nd, 1933, which are as follows:

"I shall confine my remarks to two kinds of interference. The first is that, from automobiles and aircraft, i.e., from the coil and magneto systems of petrol engines. It happens that the only prospects for a television service appear to be on the ultra-short wave-band, and therefore the abolition of interference on this wave-band is of the greatest importance to the further development of television. The difficulties encountered in radiating on ultra-short waves with a comparatively high power, and the strong attenuation of the very high frequencies involved, considerably decrease the signal noise ratio. In addition to that given by the usual screened wiring and the fitting of special suppressors (resistances) at the sparking plugs, considerable freedom from interference can be obtained by careful design. In some cases, where the design is such as

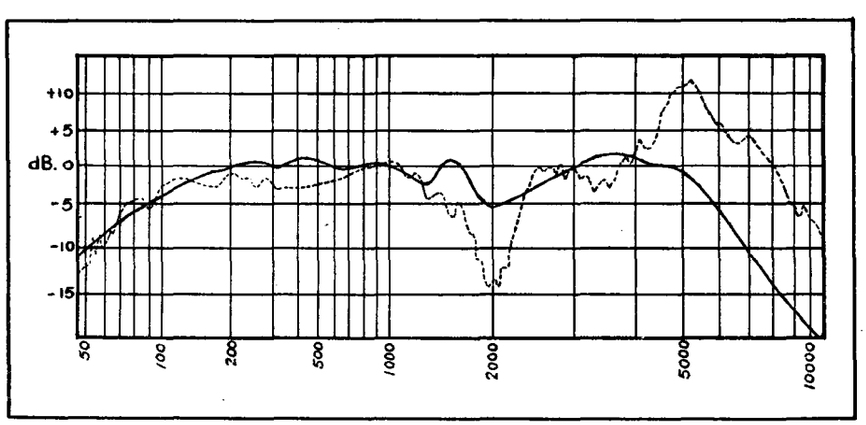

Superimposed response curves referred to in the accompanying letter.

to minimise interference, it is not even necessary to take other precautionary measures. Experiments have shown that interference on ultra-short waves varies considerably with different makes of cars. With the new Ford car very little interference seems to be produced. This is no doubt due to the unusual position of the distributor, making the connecting links from the distributor to the sparking plugs very short. In any case, practically no interference has been observed on an ultra-short wave set operating at a few yards from the running engine of this type of car. On the other hand, some very bad interference has been experienced with other well-known makes. Interference on ultra-short waves from motor cars can be minimised inexpensively, and to such an extent as to make it negligible. There are two factors which will, in time, decrease this type of interference—one is the increasing use of car radio sets, and the other the use of crude oil for motor cars. Nevertheless, legislation to stop interference will be necessary sooner or later, as ultra-short waves may be very useful in other special circumstances, besides their use in television. . . ."

LEOPOLD FRIEDMAN.

Edgware, Middlesex.

Midland Regional

RE the comments of Miss Brown and H. J. Harvey in your March 15th issue, the new Midland wave and power has definitely given us another "local station," inasmuch as the signal completely demodulates the usual electrical interference in the town, and I can assure you the traders are quite happy about it. C. R. TAYLOR.

Oldham.

AVC and the New Monodial

I, like many of your readers, had considerable trouble with the AVC system of the New Monodial, which marred an otherwise well-nigh perfect set—in fact, I cannot believe that such sets as the Single Span can beat it even on quality, as with a Hartley-Turner speaker the upper response is too high for distant listening, and the coupling has to be weakened on the heterodyne filter used to cut off these higher frequencies, as with this speaker the response is too good for present conditions.

With regard to the blasting, etc., experienced on fading stations, I have entirely overcome this trouble on two sets by substituting double-diode-triodes as detectors, with the consequent abolition of first detector control.

With this alteration the set becomes quite faultless, as fading is compensated for with an even output from the speaker until a station fades right out, when, of course, no system can bring it in.

There are two snags, however. One is that, owing to the lack of post-detector control, the two local stations come in at a greater volume than the remainder, necessitating use of the 5,000-ohm background control. This control I have transferred to my front panel, as I find it convenient to use during tuning to avoid noise.

The second thing to be noticed is that it is impossible on the local stations to set the manual volume control to full, as the triode portion becomes overloaded long before that setting is reached; but as the same sound output is obtained at half setting as compared with the full setting of the previous valve, this is no disadvantage, and, of course, on distant stations the full range of control can be utilised. Let me warn anyone effecting this alteration that a double-diode-triode takes considerably less HT current than the double-diode-pentode, and then the voltage will rise to too high a figure unless a resistance of some 20,000 ohms is shunted across the HT on the receiver chassis to compensate for the decrease.

A resistance of adequate wattage must be used, as it tends to heat up, but it is really an advantage having this resistance shunted across, as the HT voltage tends to keep more stable for different values of bias than it did before. I have tried an MHD4 valve with a 1,000-ohm bias resistor, and an ACHLDD with a 750-ohm resistor, and both work well. I can recommend the alteration with confidence. C. H.

Bolton.

In Next Week's Issue:—

Preliminary Details for the Construction of an

AC SHORT-WAVE CONVERTER

13·5 to 50 Metres

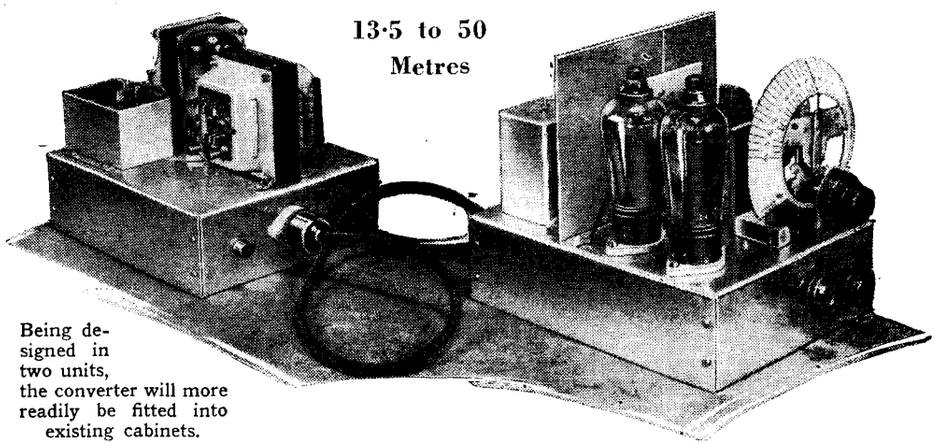

Being designed in two units, the converter will more readily be fitted into existing cabinets.

THERE is no better medium to-day for long-distance reception than the band of wavelengths lying between 14 and 50 metres. Here there are some fourscore or so short-wave broadcast stations, and a good proportion of these can be received quite satisfactorily in this country. For reliable results a selective, high-gain receiver incorporating AVC and possessing the attributes of a modern broadcast set is desirable, and this can be attained by the simple expedient of adding a suitably designed short-wave converter to the home set.

A unit that has been designed for this particular purpose will be described next week. It is a two-valve frequency changer utilising the push-pull system with the oscillator and tuned input circuits ganged. Waveband switching is incorporated, and the range covered is from 13·5 to 50 metres.

The converter is AC operated, and for convenience of housing in cabinets of diverse size and shape, is built as two parts, one being the frequency changer, and the other its power supply unit.

LIST OF PARTS.

Converter.

1 Two-gang short-wave condenser (special) **Cyldon "Bebe"** (insulated sections) 0.00015 mfd. each
1 Slow motion dial (two ratio) moving scale pattern **Polar Micro Drive**
1 Flexible coupler, ¼in. to 3/16in. **Cyldon**
1 Variable condenser, 15 m-mfd. **Eddystone Microdenser**
1 Ebonite extension spindle, 3in. long **Eddystone No. 943**
1 Semi-variable condenser, 20 m-mfd. (Bulgin) **J. B. Neutralising No. 1050**
1 Pre-set condenser, 0.0005 mfd. **Colvern**
1 Pre-set condenser, 0.001 mfd. max. **Formo Type G.** (Goltone)
5 Tubular condensers, 0.01 mfd. **Polar N.S.F.**
1 Tubular condenser, 0.0001 mfd. **Polar N.S.F.** (Bulgin, Dubilier, Ferranti, Graham-Farish, T.C.C., T.M.C. Hydra)
1 HF choke, short-wave type **Eddystone No. 948** (Raymart)

Resistances:
1 10,000 ohms, 3 watts **Erie**
1, 10,000 ohms, 2 watts **Erie**
1, 10,000 ohms, 1 watt **Erie**
1, 50,000 ohms, 1 watt **Erie**
1, 5,000 ohms, 1 watt **Erie**
1, 150 ohms, 1 watt **Erie**
2, 250 ohms, 1 watt **Erie**
(Amplion, Dubilier, Claude Lyons, Polar N.S.F., Watmel)

2 Valve holders, 7-pin s-w. chassis type **Bulgin SW42** (Clix, Goltone)
2 Stand-off insulators **Bulgin SW49** (Raymart)
3 Switches, baseboard on-off toggle **Bulgin S80B**
1 Brass shaft, 5in. long, 5/32in. dia. **Bulgin**
2 Knobs, small moulded walnut **Bulgin K14**
1 Reducing sleeve, 5/32in. **Bulgin**
1 Aluminium coil screen, 2in. x 2in. x 3in. **Goltone R9/328**
Sheet aluminium, 1 piece, No. 18 SWG gauge, for chassis, 12in. x 14in.; 1 piece for screen, 7in. x 6in.
1 5-way Connector Block **Bryce**
1 4-way Battery cable **Goltone** (Harbros)
1 Cable plug, 5-pin **Bulgin No. P3** (Goltone)
4 Insulated terminals, Aerial, Earth **Belling-Lee No. 1001** Output +, Output −.
1 Length Screened sleeving, 2 mm. bore **Goltone** (Harbros)
1 Ebonite former, six-ribbed, 1in. outside dia., 3in. long **British Ebonite Co. No. 3**
1 Ebonite former, six-ribbed, 1in. outside dia., 4in. long **British Ebonite Co. No. 3**
1 Paxolin tube, 1in. dia., 2in. long **Wright and Wearie**

Screws and rods:
40 6BA screws, c/hd., ¾in. long with nuts; **4** 4BA screws, ½in. long; **2** 4BA 1in. long; **6** 4BA nuts; **5** ½in. No. 4 R/hd. brass wood screws; **2** 1in. No. 4 countersunk brass wood screws; **1** length 6BA screwed rod, 3½in. long; **1** length 4BA screwed rod, 3½in. long.

Miscellany:
Quantity 4BA and 6BA Soldering tags, insulated sleeving and No. 18 and No. 20 SWG tinned copper wire, also quantity No. 20 DCC and No. 34 DSC wire for coils.

Valves: 2 Osram MX40 (Marconi MX40, Ferranti VHT4)

Power Unit.
1 Mains transformer, 220-0-220 volts **Sound Sales** 30 mA. 4 volts 1 amp., 4 volts 2 amps.
1 Smoothing choke, 40 henrys 30 mA. **All Power Transformers** (Bulgin)
1 Block condenser, 4+4 mfds. 400 volts DC working **T.M.C. Hydra B.1001**
2 Valve holders, 5-pin chassis type **Bulgin SW.41** (Clix, Goltone)
1 Terminal, E **Belling-Lee No. 1003**
1 Sheet aluminium for chassis 12in. x 14 in. 18 SWG.
Screws: 16 4BA screws, c/hd. ½in. long with nuts; **9** 6BA screws, c/hd. ½in. with nuts.
Quantity insulated sleeving and No. 18 SWG tinned copper wire.
Valve rectifier: Osram U10 (Cossor, 506BU, Marconi U10)

SHORT-WAVE STATIONS OF THE WORLD

(N.B.—Times of Transmission given in parentheses are approximate only and represent G.M.T.)

Metres.	kc/s.	Call Sign.	Station.	Tuning Positions.
70.2	4,273	RV15	Kharbarovsk (U.S.S.R.). (*Daily* 06.00 *to* 14.00.)	.....
58.31	5,145	OK1MPT	Prague (Czechoslovakia). (*Experimental*)	.....
55.56	5,400	HAT	Budapest (Hungary). (*Mon.* 01.00 *to* 02.00.)	.....
52.7	5,692	FIQA	Antananarivo (Madagascar). (*Daily ex. Sun.* 08.00 *to* 08.45, 15.00 *to* 16.00, *Sat.* 17.30 *to* 19.00, *Sun.* 07.30 *to* 08.00.)	.....
50.26	5,969	HVJ	Vatican City. (*Daily* 19.00 *to* 19.15, *Sun.* 10.00 *also.*)	.....
50.0	6,000	—	Bucharest (Romania)	.....
50.0	6,000	RW59	Moscow (U.S.S.R.). (*Relays No.* 1 *Stn.*) (*Daily* 20.00 *to* 23.00.)	.....
49.96	6,005	VE9DN	Montreal (Canada). (*Daily* 04.30 *to* 05.00)	.....
49.96	6,005	HJ3ABH	Bogotá (Colombia)	.....
49.85	6,018	ZHI	Singapore (Malaya). (*Mon., Wed., Thurs.* 23.00 *to* 01.30, *Sun.* 03.40 *to* 05.10.)	.....
49.83	6,020	DJC	Zeesen (Germany). (*Daily* 22.30 *to* 03.30, 17.00 *to* 21.30.)	.....
49.67	6,040	W1XAL	Boston, Mass. (U.S.A.). (*Sun.* 22.00 *to* 24.00, *Wed., Fri.* 00.30 *to* 01.45.)	.....
49.67	6,040	YDB	Sourabaya (Java). (*Daily* 03.30 *to* 06.30)	.....
49.59	6,050	GSA	Empire Broadcasting	.....
49.5	6,060	W8XAL	Cincinnati, Ohio (U.S.A.). (*Daily* 12.00 *to* 01.00, 04.00 *to* 06.00.)	.....
49.5	6,060	W3XAU	Philadelphia, Pa. (U.S.A.) (*Relays WCAU.*) (*Daily* 01.00 *to* 04.00.)	.....
49.5	6,060	VQ7LO	Nairobi (Kenya Colony). (*Daily* 16.00 *to* 19.00, *Sat. to* 20.00, *Mon., Wed., Fri.* 10.45 *to* 11.15 *also, Tues.* 08.00 *to* 09.00 *also, Thurs.* 13.00 *to* 14.00 *also, Sun.* 17.45 *to* 19.00 *also.*)	.....
49.5	6,060	OXY	Skamlebaek (Denmark). (*Relays Kalundborg.*) (*Daily* 18.00 *to* 24.00, *Sun.* 16.00 *also.*)	.....
49.43	6,069	VE9CS	Vancouver, B.C. (Canada). (*Sat.* 04.30 *to* 05.45, *Sun.* 16.00 *to* 04.00.)	.....
49.4	6,072	ZHJ	Penang (Malaya). (*Relays Empire Broadcasting.*)	.....
49.4	6,072	OER2	Vienna Experimental. (*Daily* 14.00 *to* 22.00.)	.....
49.34	6,080	W9XAA	Chicago, Ill. (U.S.A.). (*Relays WCLF.*) (*Sun.* 19.00 *to* 20.30.)	.....
49.3	6,085	2RO	Rome (Italy). (*Mon., Wed., Fri.* 23.00 *to* 00.30.)	.....
49.26	6,090	VE9BJ	St. John (N.B.). (*Daily* 00.00 *to* 01.30)...	.....
49.26	6,090	VE9GW	Bowmanville, Ont. (Canada). (*Mon., Tues., Wed.* 20.00 *to* 05.00, *Thurs., Fri., Sat.* 12.00 *to* 05.00, *Sun.* 18.00 *to* 02.00.)	.....
49.2	6,097	ZTJ	Johannesburg (S. Africa). (*Daily ex. Sun.* 04.30 *to* 05.30, 08.30 *to* 12.00, 14.00 *to* 20.00 (*Sat. to* 21.45), *Sun.* 13.00 *to* 15.15, 17.30 *to* 20.00.)	.....
49.18	6,100	W3XAL	Bound Brook, N.Y. (U.S.A.). (*Relays WJZ.*) (*Mon., Wed., Sat.* 22.00 *to* 23.00, *Sat.* 05.00 *to* 06.00 *also.*)	.....
49.18	6,100	W9XF	Chicago, Ill. (U.S.A.). (*Daily ex. Mon., Wed., Sun.* 21.00 *to* 07.00.)	.....
49.1	6,110	VUC	Calcutta (India). (*Daily* 07.06 *to* 08.06 *irregular* 13.06 *to* 16.36, *Sat. from* 12.36, *Sun.* 04.36 *to* 07.36, *irregular* 12.36 *to* 03.36.	.....
49.1	6,110	VE9HX	Halifax N.S. (*Daily* 14.00 *to* 16.30, 21.00 *to* 04.00.)	.....
49.1	6,110	GSL	Empire Broadcasting	.....
49.02	6,120	YDA	Bandoeng (Java). (*Daily* 10.30 *to* 15.00)	.....
49.02	6,120	W2XE	Wayne, N.J. (U.S.A.). (*Relays WABC.*) (*Daily* 23.00 *to* 04.00.)	.....
48.92	6,132	ZGE	Kuala Lumpur (Malaya). (*Sun., Tues., Fri.,* 11.40 *to* 13.40.)	.....
48.86	6,140	W8XK	Pittsburg, Pa. (U.S.A.). (*Relays KDKA.*) (*Daily* 21.30 *to* 06.00.)	.....
48.78	6,150	CJRO	Winnipeg (Canada). (*Daily* 00.00 *to* 05.00, *Sat.* 21.00 *to* 06.00 *also, Sun.* 22.00 *to* 03.30.)	.....
48.4	6,198	CT1GO	Parede (Portugal). (*Daily ex. Tues.* 00.20 *to* 01.30, *Sun.* 16.30 *to* 18.00 *also.*)	.....
46.69	6,425	W3XL	Bound Brook, N.J. (U.S.A.). (*Experimental*)	.....
45.38	6,610	RW72	Moscow (U.S.S.R.). (*Relays Stalin Stn.*)...	.....
38.48	7,797	HBP	Radio Nations, Prangins (Switzerland). (*Sat.* 22.30 *to* 23.15.)	.....
37.33	8,035	CNR	Rabat (Morocco). (*Sun.* 20.00 *to* 22.30)...	.....
31.58	9,500	PRF5	Rio de Janeiro (Brazil). (*Daily* 22.30 *to* 23.15.)	.....
31.55	9,510	GSB	Empire Broadcasting	.....
31.54	9,518	VK3ME	Melbourne (Australia). (*Wed.* 10.00 *to* 11.30, *Sat.* 10.00 *to* 12.00.)	.....
31.48	9,530	W2XAF	Schenectady, N.Y. (U.S.A.). (*Relays WGY.*) (*Daily* 23.30 *to* 04.00, *Sat.* 19.00 *to* 22.00 *also.*)	.....
31.45	9,540	LKJ1	Jelöy (Norway). (*Relays Oslo.*) (*Daily* 10.00 to 13.00.)	.....
31.45	9,540	DJN	Zeesen (Germany). (*Daily* 08.45 *to* 12.15, 13.00 *to* 16.30, 22.15 *to* 03.30.)	.....
31.38	9,560	DJA	Zeesen (Germany). (*Daily* 13.00 *to* 16.30, 22.15 *to* 02.00.)	.....
31.36	9,565	VUB	Bombay (India). (*Sun.* 13.30 *to* 15.30, *Wed., Thurs., Sat.* 16.30 *to* 17.30, *irregular Mon.*).	.....
31.35	9,570	W1XK	Springfield, Mass. (U.S.A.). (*Relays WBZ.*) (*Daily* 12.00 *to* 06.00.)	.....
31.32	9,580	GSC	Empire Broadcasting	.....
31.32	9,580	VK3LR	Lindhurst (Australia). (*Daily ex. Sun.* 08.15 *to* 12.30.)	.....
31.28	9,590	W3XAU	Philadelphia, Pa. (U.S.A.). (*Relays WCAU.*) (*Daily* 17.00 *to* 24.00.)	.....
31.28	9,590	VK2ME	Sydney (Australia). (*Sun.* 06.00 *to* 08.00, 10.00 *to* 14.00, 14.30 *to* 16.30.)	.....
31.27	9,595	HBL	Radio Nations, Prangins (Switzerland). (*Sat.* 22.30 *to* 23.15.)	.....
31.25	9,600	CT1AA	Lisbon (Portugal). (*Tues., Thurs., Sat.* 21.30 *to* 24.00.)	.....
31.0	9,677	CT1CT	Lisbon (Portugal). (*Thurs.* 21.00 *to* 23.00, *Sun.* 12.00 *to* 14.00.)	.....
30.67	9,780	2RO	Rome (Italy). (*Tues., Thurs., Sat.* 00.45 *to* 02.15).	.....
30.43	9,860	EAQ	Madrid (Spain). (*Daily* 22.15 *to* 00.30, *Sat.* 18.00 *to* 20.00 *also.*)	.....
29.04	10,330	ORK	Ruysselede (Belgium). (*Daily* 18.30 *to* 20.30.)	.....
28.98	10,350	LSX	Buenos Aires (Argentina). (*Daily* 20.00 *to* 21.00.)	.....
25.6	11,720	FYA	Paris, Radio Coloniale (France). (*Colonial Stn. E-W.*) *Daily* 00.00 *to* 03.00, 04.00 *to* 06.00.)	.....
25.6	11,720	CJRX	Winnipeg (Canada). (*Daily* 00.00 *to* 05.00, *Sat.* 21.00 *to* 06.00 *also, Sun.* 22.00 *to* 03.30 *also.*)	.....
25.57	11,730	PHI	Eindhoven (Holland). (*Daily ex. Tues., Wed.* 13.00 *to* 15.30 (*Sun., Sat. to* 16.30.)	.....
25.53	11,750	GSD	Empire Broadcasting	.....
25.49	11,770	DJD	Zeesen (Germany). (*Daily* 17.00 *to* 21.30)	.....
25.45	11,790	W1XAL	Boston, Mass. (U.S.A.). (*Daily* 23.00 *to* 00.30.)	.....
25.4	11,810	2RO	Rome (Italy) (*Mon., Wed., Fri.*, 23.00) ...	.....
25.36	11,830	W2XE	Wayne, N.J. (U.S.A.). (*Relays WABC.*) (*Daily* 20.00 *to* 22.00.)	.....
25.29	11,860	GSE	Empire Broadcasting	.....
25.27	11,870	W8XK	Pittsburg, Pa. (U.S.A.). (*Relays KDKA.*) (*Daily* 21.30 *to* 03.00.)	.....
25.23	11,880	FYA	Paris, Radio Coloniale (France). (*Colonial Stn. N-S.*) (*Daily* 16.15 *to* 19.15, 20.00 *to* 23.00.)	.....
25.0	12,000	RW59	Moscow (U.S.S.R.). (*Relays No.* 2 *Stn.*) (*Sun.* 03.00 *to* 04.00, 11.00 *to* 12.00, 15.00 *to* 16.00.)	.....
24.83	12,082	CT1CT	Lisbon (Portugal). (*Sun.* 14.00 *to* 16.00, *Thurs.* 20.00 *to* 21.00.)	.....
24.2	12,396	CT1GO	Parede (Portugal). (*Sun.* 15.00 *to* 16.30, *Tues., Thurs., Fri.* 18.00 *to* 19.15.)	.....
23.39	12,830	CNR	Rabat (Morocco). (*Sun.* 12.30 *to* 14.00)...	.....
19.84	15,123	HVJ	Vatican City. (*Daily* 10.00, 15.30 *to* 15.45)	.....
19.82	15,140	GSF	Empire Broadcasting	.....
19.74	15,200	DJB	Zeesen (Germany). (*Daily* 08.45 *to* 12.15)	.....
19.72	15,210	W8XK	Pittsburg, Pa. (U.S.A.). (*Relays KDKA.*) (*Daily* 13.00 *to* 21.15.)	.....
19.71	15,220	PCJ	Eindhoven (Holland). (*Experimental*) ...	.....
19.68	15,243	FYA	Paris, Radio Coloniale (France). (*Colonial Stn. E.W.*) (*Daily* 12.00 *to* 16.00.)	.....
19.67	15,250	W1XAL	Boston, Mass. (U.S.A.). (*Daily* 15.50 *to* 18.30.)	.....
19.66	15,260	GSI	Empire Broadcasting	.....
19.64	15,270	W2XE	Wayne, N.J. (U.S.A.). (*Relays WABC.*) (*Daily* 16.00 *to* 18.00.)	.....
19.56	15,330	W2XAD	Schenectady, N.Y. (U.S.A.). (*Daily* 19.30 *to* 20.30.)	.....
19.52	15,370	HAS3	Budapest (Hungary). (*Sun.* 13.00 *to* 14.00.)	.....
17.33	17,310	W3XL	Bound Brook, N.J. (U.S.A.). (*Daily* 16.00 *to* 22.00.)	.....
16.89	17,760	DJE	Zeesen (Germany) (*Daily* 13.00 *to* 16.30.)	.....
16.87	17,780	W3XAL	Bound Brook, N.J. (U.S.A.). (*Relays WJZ.*) (*Daily except Sun.* 14.00 *to* 15.00, *Tues., Thurs., Fri.* 20.00 *to* 21.00 *also.*)	.....
16.86	17,790	GSG	Empire Broadcasting	.....
13.97	21,470	GSH	Empire Broadcasting	.....
13.93	21,530	GSJ	Empire Broadcasting	.....
13.92	21,540	W8XK	Pittsburg, Pa. (U.S.A.). (*Daily* 12.00 *to* 14.00.)	.....

THE RADIO INDUSTRY

MICROFUSES, LTD., makers of the well-known gold-film fuses, have just moved to larger premises at 4, Charterhouse Buildings, Goswell Road, London, E.C.1; telephone: Clerkenwell 4049. The new list issued by the firm (of which copies and any technical information required will be sent to readers who are interested) shows that fuses rated as low as 1, 2 and 3 mA are now in regular production; these are, of course, mainly used for the protection of delicate instruments. Microfuses are particularly suitable for this purpose, as they have a very small time-lag before blowing under overload.

◇ ◇ ◇ ◇

Shaftesbury Supplies, of 224, Shaftesbury Avenue, London, W.C.2, will be pleased to send to readers copies of their illustrated catalogue giving details of the 55s. microphone.

◇ ◇ ◇ ◇

The Ekco exhibit at the recent Physics Exhibition, held in conjunction with the Conference on Industrial Physics at Manchester University, comprised various communication engineering instruments. This is the first occasion on which the apparatus has been publicly demonstrated. Incidentally, it may be mentioned that pamphlets describing the Master Signal Generator system, Intermediate Frequency Inductance Bridges, Portable Impedance Comparison Bridge, Distortion Factor Meter, Power Frequency Tripler, Short-circuited Turns Tester, Valve Voltmeter, and other apparatus are now available.

◇ ◇ ◇ ◇

The National Union Radio Corporation of New York has sent us particulars of the new 6E6 indirectly heated valve, which consists of two output triodes in one bulb. The valve is intended for use in car radio or AC mains sets, either in a push-pull circuit or with the elements of the two triodes in parallel.

◇ ◇ ◇ ◇

Mr. M. Rogers, formerly of Shaftesbury Supplies, has commenced business on his own account under the style of M.R. Supplies, at 29a, Charing Cross Road, London W.C.2. He proposes to concentrate on microphones, amplifiers, mains gear, and television apparatus.

PRINCIPAL BROADCASTING STATIONS OF EUROPE

Arranged in Order of Frequency and Wavelength

(Stations with an aerial power of 50 kW. and above in heavy type)

Station.	kc/s.	Tuning Positions.	Metres.	kW.
Kaunas (Lithuania)	155	.....	1935	7
Brazov (Romania)	160	.....	1875	20
Huizen (Holland). (*Until* 3.40 *p.m.*)	160	.....	1875	7
Kootwijk (Holland) (*Announced Huizen*). (3.40 *p.m. onwards*)	160	.....	1875	50
Lahti (Finland)	166	.....	1807	40
Moscow, No. 1, RW1 (Komintern) (U.S.S.R.)	174	.....	1724	500
Paris (Radio Paris) (France)	182	.....	1648	80
Istanbul (Turkey)	187.5	.....	1600	5
Berlin (Deutschlandsender Zeesen) (Germany) (*S.-w. Stns.*, 16.89, 19.74, 25.49, 31.38 *and* 49.83 *m.*)	191	.....	1571	60
Droitwich	200	.....	1500	150
Minsk, RW10 (U.S.S.R.)	208	.....	1442	35
Reykjavik (Iceland)	208	.....	1442	16
Paris (Eiffel Tower) (France)	216	.....	1389	15
Motala (Sweden). (*Relays Stockholm*)	216	.....	1389	30
Novosibirsk, RW76 (U.S.S.R.)	217·5	.....	1379	100
Warsaw, No. 1 (Raszyn) (Poland)	224	.....	1339	120
Ankara (Turkey)	230	.....	1304	7
Luxembourg	230	.....	1304	150
Kharkov, RW20 (U.S.S.R.)	232	.....	1293	20
Kalundborg (Denmark) (*S.-w. Stn.*, 49.5 *m.*)	238	.....	1261	60
Leningrad, RW53 (Kolpino) (U.S.S.R.)	245	.....	1224	100
Tashkent, RW11 (U.S.S.R.)	256.4	.....	1170	25
Oslo (Norway)	260	.....	1154	60
Moscow, No. 2, RW49 (Stchelkovo) (U.S.S.R.)	271	.....	1107	100
Tiflis, RW7 (U.S.S.R.)	280	.....	1071.4	35
Rostov-on-Don, RW12 (U.S.S.R.)	355	.....	845	20
Sverdlovsk, RW5 (U.S.S.R.)	375	.....	800	50
Geneva (Switzerland). (*Relays Sottens*)	401	.....	748	1.3
Moscow, No. 3 (RCZ) (U.S.S.R.)	401	.....	748	100
Voroneje, RW25 (U.S.S.R.)	413.5	.....	726	10
Oulu (Finland)	431	.....	696	1.2
Ufa, RW22 (U.S.S.R.)	436	.....	688	10
Hamar (Norway) (*Relays Oslo*)	519	.....	578	0.7
Innsbruck (Austria). (*Relays Vienna*)	519	.....	578	1
Ljubljana (Yugoslavia)	527	.....	569.3	5
Viipuri (Finland)	527	.....	569.3	10
Bolzano (Italy)	536	.....	559.7	1
Wilno (Poland)	536	.....	559.7	16
Budapest, No. 1 (Hungary)	546	.....	549.5	120
Beromünster (Switzerland)	556	.....	539.6	100
Athlone (Irish Free State)	565	.....	531	60
Palermo (Italy)	565	.....	531	4
Stuttgart (Mühlacker) (Germany)	574	.....	522.6	100
Grenoble, P.T.T. (France)	583	.....	514.6	15
Riga (Latvia)	583	.....	514.6	15
Vienna (Bisamberg) (Austria)	592	.....	506.8	100
Rabat (Radio Maroc) (Morocco)	601	.....	499.2	25
Sundsvall (Sweden). (*Relays Stockholm*)	601	.....	499.2	10
Florence (Italy). (*Relays Milan*)	610	.....	491.8	20
Cairo (Abu Zabal) (Egypt)	620	.....	483.9	20
Brussels, No. 1 (Belgium). (*French Programme*)	620	.....	483.9	15
Lisbon (Bacarena) (Portugal)	629	.....	476.9	20
Tröndelag (Norway)	629	.....	476.9	20
Prague, No. 1 (Czechoslovakia)	638	.....	470.2	120
Lyons, P.T.T. (La Doua) (France)	648	.....	463	15
Cologne (Langenberg) (Germany)	658	.....	455.9	100
North Regional (Slaithwaite)	668	.....	449.1	50
Sottens (Radio Suisse Romande) (Switzerland)	677	.....	443.1	25
Belgrade (Yugoslavia)	686	.....	437.3	2.5
Paris, P.T.T. (Ecole Supérieure) (France)	695	.....	431.7	7
Stockholm (Sweden)	704	.....	426.1	55
Rome, No. 1 (Italy) (*S.-w. stn.*, 25.4 *m.*)	713	.....	420.8	50
Kiev, RW9 (U.S.S.R.)	722	.....	415.5	36
Tallinn (Esthonia)	731	.....	410.4	20
Madrid, EAJ2 (Radio España) (Spain)	731	.....	410.4	3
Munich (Germany)	740	.....	405.4	100
Marseilles, P.T.T. (France)	749	.....	400.5	5
Katowice (Poland)	758	.....	395.8	12
Scottish Regional (Falkirk)	767	.....	391.1	50
Toulouse, P.T.T. (France)	776	.....	386.6	2
Leipzig (Germany)	785	.....	382.2	120
Barcelona, EAJ1 (Spain)	795	.....	377.4	5
Lwow (Poland)	795	.....	377.4	16
West Regional (Washford Cross)	804	.....	373.1	50
Milan (Italy)	814	.....	368.6	50
Bucharest (Romania)	823	.....	364.5	12
Moscow, No. 4, RW39 (Stalina) (U.S.S.R.)	832	.....	360.6	100
Berlin (Funkstunde Tegel) (Germany)	841	.....	356.7	100
Bergen (Norway)	850	.....	352.9	1
Sofia (Bulgaria)	850	.....	352.9	1
Valencia (Spain)	850	.....	352.9	1.5
Simferopol, RW52 (U.S.S.R.)	859	.....	349.2	10
Strasbourg, P.T.T. (France)	859	.....	349.2	35
Poznan (Poland)	868	.....	345.6	16
London Regional (Brookmans Park)	877	.....	342.1	50
Graz (Austria). (*Relays Vienna*)	886	.....	338.6	7
Helsinki (Finland)	895	.....	335.2	10
Hamburg (Germany)	904	.....	331.9	100
Toulouse (Radio Toulouse) (France)	913	.....	328.6	60
Limoges, P.T.T. (France)	913	.....	328.6	0.5
Brno (Czechoslovakia)	922	.....	325.4	32
Brussels, No. 2 (Belgium). (*Flemish Prog'mme*)	932	.....	321.9	15
Algiers, P.T.T. (Radio Alger) (Algeria)	941	.....	318.8	12
Göteborg (Sweden). (*Relays Stockholm*)	941	.....	318.8	10
Breslau (Germany)	950	.....	315.8	100
Paris (Poste Parisien) (France)	959	.....	312.8	60
Belfast	977	.....	307.1	1
Genoa (Italy). (*Relays Milan*)	986	.....	304.3	10
Hilversum (Holland). (7 *kW.* till 6.40 p.m.)	995	.....	301.5	20
Bratislava (Czechoslovakia)	1004	.....	298.8	13.5
Midland Regional (Droitwich)	1013	.....	296.2	50
Barcelona, EAJ15 (Radio Asociación) (Spain)	1022	.....	293.5	3
Cracow (Poland)	1022	.....	293.5	2
Königsberg (Heilsberg Ermland) (Germany)	1031	.....	291	17
Parede (Radio Club Português) (Portugal)	1031	.....	291	5
Leningrad, No. 2, RW70 (U.S.S.R.)	1040	.....	288.5	10
Rennes, P.T.T. (France)	1040	.....	288.5	40
Scottish National (Falkirk)	1050	.....	285.7	50
Bari (Italy)	1059	.....	283.3	20
Tiraspol, RW57 (U.S.S.R.)	1068	.....	280.9	4
Bordeaux, P.T.T. (Lafayette) (France)	1077	.....	278.6	30
Zagreb (Yugoslavia)	1086	.....	276.2	0.7
Falun (Sweden)	1086	.....	276.2	2
Madrid, EAJ7 (Union Radio) (Spain)	1095	.....	274	7
Madona (Latvia)	1104	.....	271.7	50
Naples (Italy). (*Relays Rome*)	1104	.....	271.7	1.5
Moravska-Ostrava (Czechoslovakia)	1113	.....	269.5	11.2
Alexandria (Egypt)	1122	.....	267.4	0.25
Newcastle	1122	.....	267.4	1
Nyiregyhaza (Hungary)	1122	.....	267.4	6.2
Hörby (Sweden). (*Relays Stockholm*)	1131	.....	265.3	10
Turin, No. 1 (Italy). (*Relays Milan*)	1140	.....	263.2	7
London National (Brookmans Park)	1149	.....	261.1	20
North National (Slaithwaite)	1149	.....	261.1	20
West National (Washford Cross)	1149	.....	261.1	20
Kosice (Czechoslovakia). (*Relays Prague*)	1158	.....	259.1	2.6
Monte Ceneri (Switzerland)	1167	.....	257.1	15
Copenhagen (Denmark). (*Relays Kalundborg*)	1176	.....	255.1	10
Kharkov, No. 2, RW4 (U.S.S.R.)	1185	.....	253.2	10
Frankfurt (Germany)	1195	.....	251	17
Prague, No. 2 (Czechoslovakia)	1204	.....	249.2	5
Lille, P.T.T. (France)	1213	.....	247.3	5
Trieste (Italy)	1222	.....	245.5	10
Gleiwitz (Germany). (*Relays Breslau*)	1231	.....	243.7	5
Cork (Irish Free State) (*Relays Athlone*)	1240	.....	241.9	1
Juan-les-Pins (Radio Côte d'Azur) (France)	1249	.....	240.2	2
Kuldiga (Latvia)	1258	.....	238.5	10
Rome, No. 3 (Italy)	1258	.....	238.5	1
San Sebastian (Spain)	1258	.....	238.5	3
Nürnberg and Augsburg (Germany) (*Relay Munich*)	1267	.....	236.8	2
Christiansand and Stavanger (Norway)	1276	.....	235.1	0.5
Dresden (Germany) (*Relays Leipzig*)	1285	.....	233.5	1.5
Aberdeen	1285	.....	233.5	1
Austrian Relay Stations	1294	.....	231.8	0.5
Danzig. (*Relays Königsberg*)	1303	.....	230.2	0.5
Swedish Relay Stations	1312	.....	228.7	1.25
Budapest, No. 2 (Hungary)	1321	.....	227.1	0.8
German Relay Stations	1330	.....	225.6	1.5
Montpellier, P.T.T. (France)	1339	.....	224	5
Lodz (Poland)	1339	.....	224	1.7
Dublin (Irish Free State) (*Relays Athlone*)	1348	.....	222.6	0.5
Milan, No. 2 (Italy) (*Relays Rome*)	1348	.....	222.6	4
Turin, No. 2 (Italy). (*Relays Rome*)	1357	.....	221.1	0.2
Basle and Berne (Switzerland)	1375	.....	218.2	0.5
Warsaw, No. 2 (Poland)	1384	.....	216.8	2
Lyons (Radio Lyons) (France)	1393	.....	215.4	5
Tampere (Finland)	1420	.....	211.3	0.7
Paris, (Radio LL) (France)	1424	.....	210.7	0.8
Béziers (France)	1429	.....	209.9	1.5
Miskolc (Hungary)	1438	.....	208.6	1.25
Fécamp (Radio Normandie) (France)	1456	.....	206	10
Pecs (Hungary)	1465	.....	204.8	1.25
Bournemouth	1474	.....	203.5	1
Plymouth	1474	.....	203.5	0.3
International Common Wave	1492	.....	201.1	0.2
International Common Wave	1500	.....	200	0.25
Liepàja (Latvia)	1737	.....	173	0.1

NOTE. Since the publication of the previous list alterations have been made to the particulars of the following station: Cracow (Poland).

The Wireless World
THE PRACTICAL RADIO JOURNAL
25th Year of Publication

No. 815. FRIDAY, APRIL 12TH, 1935. VOL. XXXVI. No. 15.

Proprietors : ILIFFE & SONS LTD.

Editor :
HUGH S. POCOCK.

Editorial,
Advertising and Publishing Offices :
DORSET HOUSE, STAMFORD STREET,
LONDON, S.E.1.

Telephone : Hop. 3333 (50 lines).
Telegrams : "Ethaworld, Watloo, London."

COVENTRY : Hertford Street.
Telegrams : "Autocar, Coventry." Telephone : 5210 Coventry.

BIRMINGHAM :
Guildhall Buildings, Navigation Street, 2.
Telegrams : "Autopress, Birmingham." Telephone : 2971 Midland (4 lines).

MANCHESTER : 260, Deansgate, 3.
Telegrams : "Iliffe, Manchester." Telephone : Blackfriars 4412 (4 lines).

GLASGOW : 26B, Renfield Street, C.2.
Telegrams : "Iliffe, Glasgow." Telephone : Central 4857.

PUBLISHED WEEKLY. ENTERED AS SECOND CLASS MATTER AT NEW YORK, N.Y.

Subscription Rates :
Home, £1 1s. 8d. ; Canada, £1 1s. 8d. ; other countries, £1 3s. 10d. per annum.

As many of the circuits and apparatus described in these pages are covered by patents, readers are advised, before making use of them, to satisfy themselves that they would not be infringing patents.

CONTENTS

	Page
Editorial Comment	357
AC Short-wave Converter	358
Wave Distortion in Receivers—I	362
Current Topics	365
Unbiased	366
What is a "Sync"?	367
Broadcast Brevities	369
Pye SE/AC Console Reviewed	370
Listeners' Guide for the Week	372
Foundations of Wireless	374
The Jubilee Broadcasts	377
Letters to the Editor	378
Practical Hints and Tips	379
Amongst the Short-waves	379

EDITORIAL COMMENT

Policy Behind Broadcasting

Sir John Reith's Assurances

SIR JOHN REITH visited South Africa recently at the invitation of the Union Government. It is now well known that the object of the visit was to give to the Union Government the benefit of his experience and advice in connection with the development of broadcasting in South Africa, and the South African Government has now announced its intention to adopt the recommendations made in a Report prepared by Sir John Reith before he left Africa in November.

The Report is a particularly interesting document. That it has been ably prepared is, perhaps, the least interesting part of it and, in any case, can be taken for granted in view of the authorship.

What the Report undoubtedly reveals is that Sir John is pretty well satisfied with the general lines on which broadcasting here has been developed, and is prepared to recommend that the same basis of construction should be followed elsewhere. If it were not so, we might well have expected to see this opportunity taken to put forward some new ideals which could not, perhaps, be applied except in a country where broadcasting was making a fresh start.

Sir John emphasises that "Great importance attaches to the personnel of the first Board," and he also says "The best method of appointment seems to be by the Governor-General-in-Council, rather than by any system of election or quasi-election on a basis representative of particular interests."

In his reference to programme policy in the Report, Sir John Reith probably reveals his personal views more clearly and precisely than he has done hitherto, and there can be little doubt that what he now recommends for South Africa is in keeping with the practice of the B.B.C. here. In the Report he says :—

"A right appreciation of listeners' needs is a particular requisite if there are to be listeners, but this does not necessarily imply the expressed wishes of a quarter of a million listeners nor even the presumed wishes of a presumed average listener. Broadcasters are appointed to execute a high commission and they cannot bend to every breeze of criticism that blows. With every desire to ascertain the wishes of listeners, with no complacency, still less autocracy, in their outlook, they must be fit and prepared to lead. They must not fear to let idealism play its worthy part ; for the long view is not necessarily coincident with the popular view."

The Report as a whole can very well be taken as in the nature of a statement of B.B.C. policy for this country, and as such has far more significance than the immediate object for which it was compiled might imply. At least it ensures for us that so long as the B.B.C. remains under its present control there will be no irresponsible meddling with programme policy and that a reasoned aloofness from the influence of purely sectarian criticism will be maintained.

Short-wave Converters

IN spite of its low efficiency and erratic behaviour, the crude autodyne circuit has been almost the standard arrangement for short-wave converters for a surprisingly large number of years. But at last something distinctly better can be done, and readers who are interested in short-wave working will appreciate the advantages of the push-pull frequency-changer described in this issue.

AC Short-wave Converter

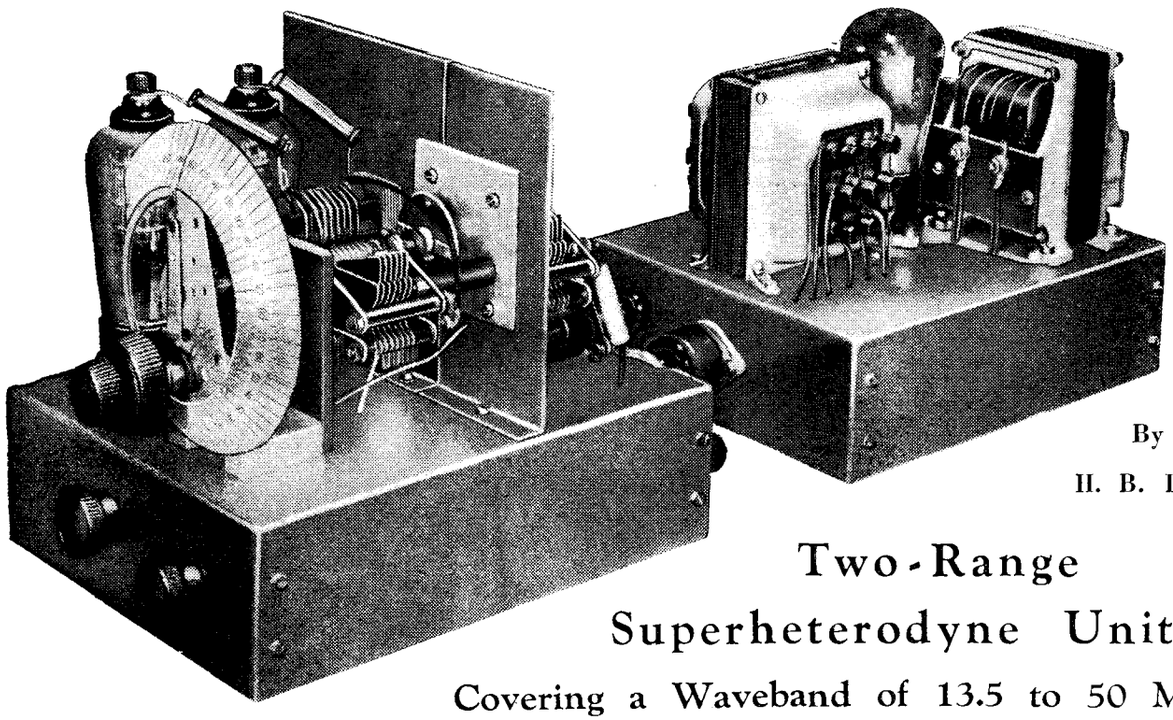

By
H. B. DENT

Two-Range Superheterodyne Unit

Covering a Waveband of 13.5 to 50 Metres

THE best of the short-wave broadcasting stations come in on the waveband 14 to 50 metres. The short-wave converter here described covers this range and it can be coupled up easily to any good selective broadcast receiver. A remarkably good performance is given by this unit, which incorporates a number of interesting features.

BY the addition of a special frequency changer unit, any modern broadcast set can be converted into an efficient and very satisfactory short-wave receiver. The only proviso that need be made is that the receiver includes at least one HF stage if it is of the straight variety, but in the case of superheterodynes there is no need for an HF amplifier to precede the frequency changer. With a set of this type a double change of frequency is entailed, first from the short waves to the frequency at which the input circuits are adjusted, and then from this frequency to that of the incorporated IF amplifier. It might be thought that the use of two local oscillators would lead to the production of beats, since both will be fairly rich in harmonics, but in practice this does not appear to be troublesome.

Circuit Interaction

Converters employing an autodyne frequency changer, that is to say a single valve serving the dual function of oscillator and first detector, and sometimes preceded by an aperiodic HF stage, have been used extensively in the past in view of their simplicity, but they possess so many disadvantages that the possible alternative schemes, whilst admittedly somewhat more involved, are well worth serious consideration.

When a departure is made from the autodyne arrangement, and a tuned aerial circuit introduced, we are faced with the difficulty of adequately isolating the signal and oscillator circuits. A high intermediate frequency offers a possible solution, but this course is not practical where double frequency changing is employed, since the second oscillator is approaching dangerously close in frequency to the first, or short-wave oscillator, and beating between the harmonics of the one and the fundamental, as well as its harmonics, of the other, is likely to prove troublesome. This course is practicable only in a set designed from the commencement for short-wave reception and cannot be applied conveniently to a converter.

A heptode-type frequency changer exhibits this phenomenon on the short waves, though at broadcast frequencies it is quite satisfactory. One reason is that the signal and oscillator frequencies are so very much higher that the incidental capacities associated with the frequency changer cannot be ignored.

A separate oscillator valve used in conjunction with a heptode is helpful in isolating the two circuits, but perhaps the best scheme of all is a two-valve frequency changer using heptodes, or equivalent types, and arranging the input and output circuits in push-pull with the oscillator sections in parallel.

By very careful layout of the components and perfect screening this arrangement would be self-neutralised, so that the oscillator and signal circuits are not interdependent. In practice the ideal is not attainable, but the interaction between the two circuits can be reduced to a point where only the minimum of pulling takes place.

Intermediate Frequency

Interaction between the signal and the oscillator circuits results in the aerial circuit appearing to be very critical, it being possible to tune out one station and tune in another with this condenser alone. Actually it is affecting the oscillator frequency as well, for otherwise the aerial circuit would merely vary the strength of the received signals.

When the two circuits are controlled by a ganged condenser their interdependence is not noticeable, providing the tracking is accurately maintained throughout, but it does seriously complicate the initial lining up of the circuits.

The choice of a suitable intermediate frequency is the first matter for consideration. A high IF has many advantages, but the one serious drawback when using a converter with a superheterodyne has already been explained; yet a reasonable separation between oscillator and signal

AC Short-wave Converter—

frequencies is very desirable. There is one other factor to consider. If we use any of the long-wave broadcast frequencies the repeat, or second channel tuning points, for each short-wave station are present as in an autodyne unit, even though the two circuits are ganged. The selectivity of one tuned input circuit is inadequate to avoid this effect until a fairly wide frequency separation of the two tuning points is attained. The situation becomes easier at the lower end of the long-wave range, but perhaps the best compromise is to employ an IF of about 600 kc/s (500 metres). The medium-wave range is often slightly more sensitive than the long wave, there is ample frequency separation between the second channel tuning points and beating between harmonics, and the fundamental of the oscillators is not usually troublesome.

After this brief explanation of the factors that influenced the choice of the particular arrangement for the frequency changer in the short-wave converter illustrated here we can proceed to examine in detail the complete circuit as shown in Fig. 1.

Provision is made for receiving over a waveband of 13.5 to 50 metres without changing the coils. This band is covered in two steps, with a small overlap between ranges one and two, which ranges are selected by means of ganged switches. As the two frequency changing valves are operated in push-pull for reception, the input circuit must be centre tapped, which entails arranging the coils in such a manner that the symmetry is preserved on both wavebands. This is achieved, in the present case, by winding the shorter range coil in two separate and equal parts, but on the same former. These are the coils L2 and L3. The additional loading coil for range two is on a separate former, with the windings joined between the inners of coils L2 and L3 and the centre point of the winding is earthed. On range one both halves of coil L4 are short-circuited, thus giving the required symmetrical arrangement with a centre tapping.

The aerial coil consists of a few turns tightly coupled to the range one coil and disposed equally each side of the centre of this coil. It suffices for both wavebands. As the oscillator sections of the valves are joined in parallel we can adopt a much simpler and more straightforward coil assembly, and in this case the two coils are wound on one former, though they are not a continuous winding, as one of the padding condensers is connected between them. The Hartley circuit shown makes for a simple coil construction and has the added advantage that it oscillates very easily.

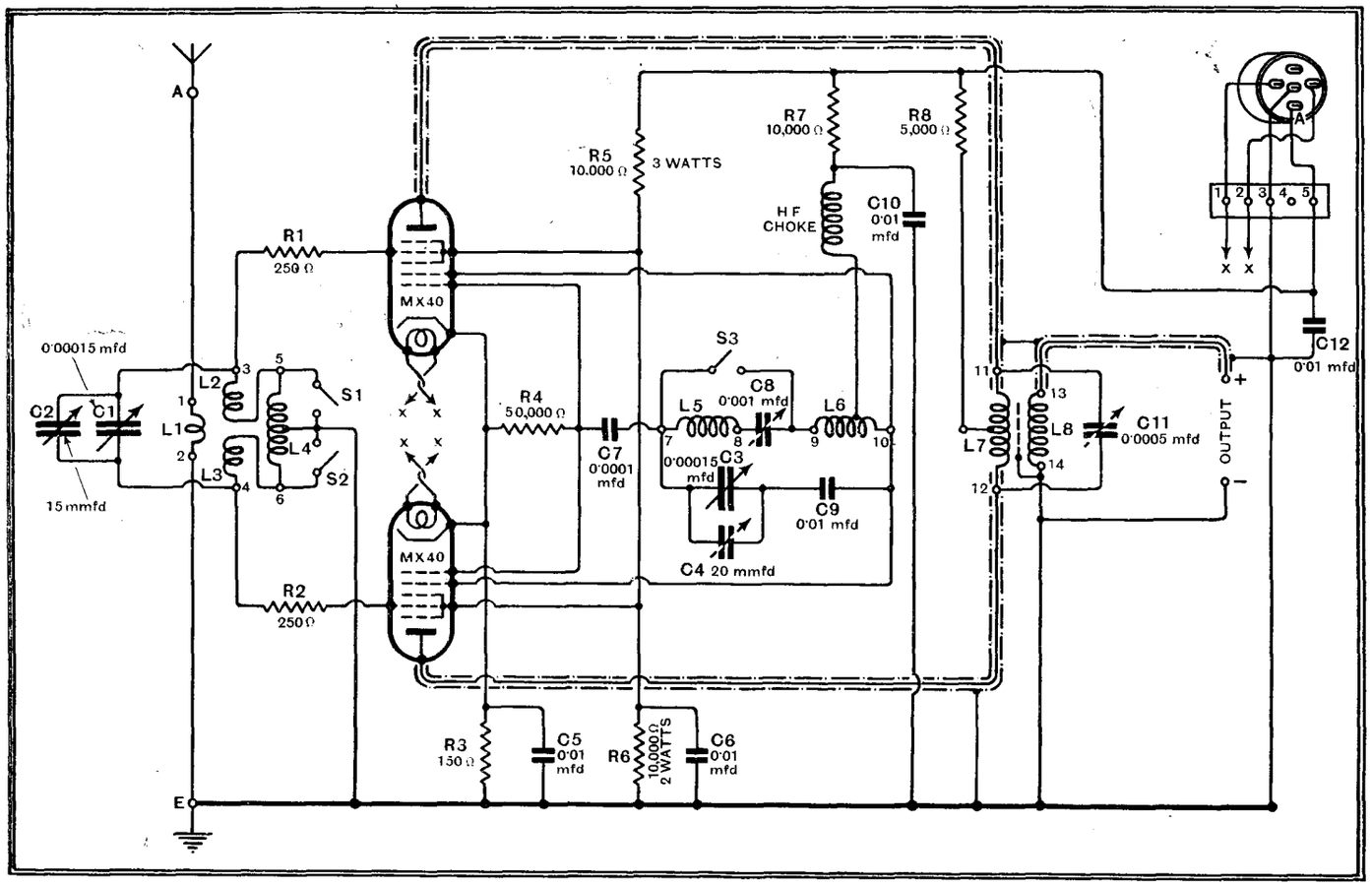

Fig. 1.—Theoretical circuit of the short-wave converter unit in which two heptode-type frequency changing valves are used in push-pull

Controls

A two-gang condenser of 0.00015 mfd. each section, with both stator and fixed vanes insulated from the corresponding sections on the companion member, tunes the input and the oscillator circuits. These are C1 and C3 in the diagram. There is a small trimming condenser joined across each, C2 for the input and C4 for the oscillator. The second mentioned is a semi-variable type, and only fixes the minimum capacity of the oscillator to trim this circuit at the lowest setting of the range. C2 is a small variable for trimming the input circuit and to make good any mistracking of the two circuits. Its inclusion in the controls is justified on the ground that accurate tracking is by no means easy to maintain throughout, though the two circuits can be made to run reasonably well by including series padding condensers in the oscillator, but a small adjustment at different parts of the range to correct for minor discrepancies is well-nigh indispensable in a short-wave circuit of this type.

Two padding capacities are needed for the oscillator. C9 is a 0.01 mfd. fixed condenser, and is used for tracking on range one. For range two, the higher band, a smaller padding condenser has to be used, and this is provided by C8 joined between the two coils and which on range one is short-circuited by the same switch as short-circuits the additional coil L5. About 0.0008 mfd. is needed for padding range one, so that C8 has a maximum value of 0.001 mfd. and is a semi-variable or pre-set type.

High tension is fed to the oscillator anodes through a short-wave HF choke

AC Short-wave Converter—

joined to the third turn from the anode end of coil L6. This is the range one coil, and the tapping holds good for the longer range also.

The only other part of the circuit that requires explaining is the output transformer. As the signal is applied in push-pull the output must be taken in the same manner, for which is used a transformer having its primary winding L7 tuned and centre tapped, whilst coupled to it is a second winding, L8, for feeding the IF frequency to the input of the broadcast receiver. The two windings are separated by an electrostatic screen, first to ensure that the coupling shall be only magnetic and so balance out the unwanted HF components flowing in the primary winding, and second to ensure equal capacity to earth each side of the centre tapping. Without this screening the presence of a lumped earth capacity at one end of the coil, for both primary and secondary are wound concentrically on a one-inch Paxolin former, would result in the two sections of the primary being out of balance. One end of the secondary joins to the aerial terminal on the set; this is marked "Output +"; the other, "Output –," goes to the earth terminal.

The screen voltage for the valves is derived from a potentiometer consisting of two fixed resistors R5 and R6 in an orthodox manner, whilst the grids of the tetrode portions are given a small negative bias by

HOW TO MAKE THE ALUMINIUM CHASSIS

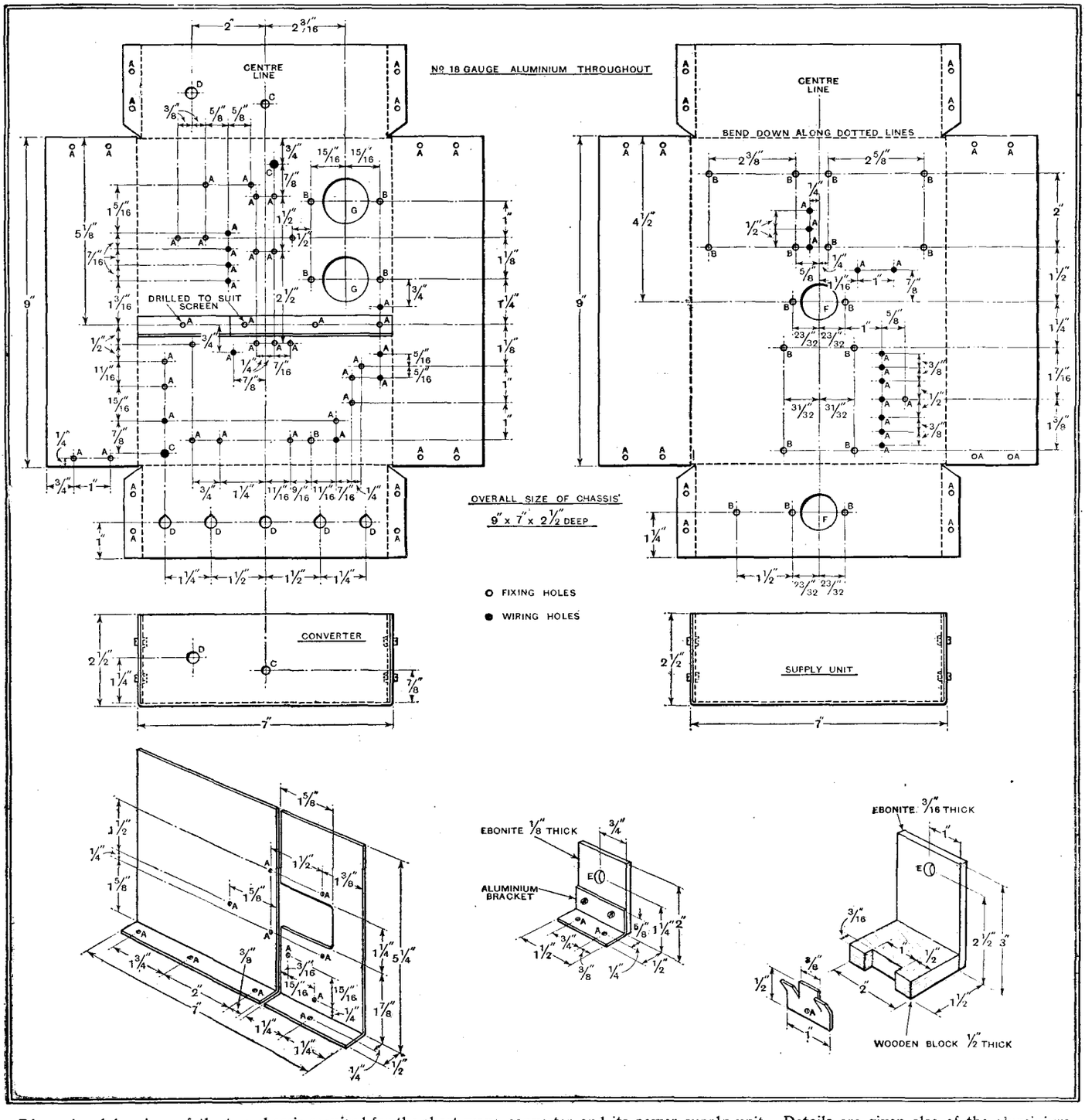

Dimensional drawings of the two chassis required for the short-wave converter and its power supply unit. Details are given also of the aluminium screens and of the two small brackets. Sizes of holes are: A = ⅛ in. dia.; B = 5/32 in. dia.; C = ¼ in. dia.; D = 3/16 in. dia.; E = ⅜ in. dia.; F = 1 in. dia.; and G = 1¼ in. dia.

AC Short-wave Converter—

inserting a 150-ohm resistor R3 in the common cathode lead to the earth line.

The resistors R1 and R2, each of 250 ohms, in the grid leads of the tetrode sections are to suppress parasitic oscillations in the input circuit which may appear if the circuit is not perfectly balanced. In some cases it might be possible to reduce these to 100 ohms each, whereas if the two halves are badly out of balance through stray leakage or other causes, these might even require to be increased to about 500 ohms. The converter derives its HT and LT from a separate unit, the circuit of which is given in Fig. 2. Incidentally, the chassis of this unit is exactly the same size as that of the converter. Dividing the apparatus into two parts allows for considerable latitude in the choice of a cabinet. They can be mounted side by side, or as a two-deck assembly, according to individual requirements.

The construction and operation of the converter will be fully dealt with in the concluding instalment.

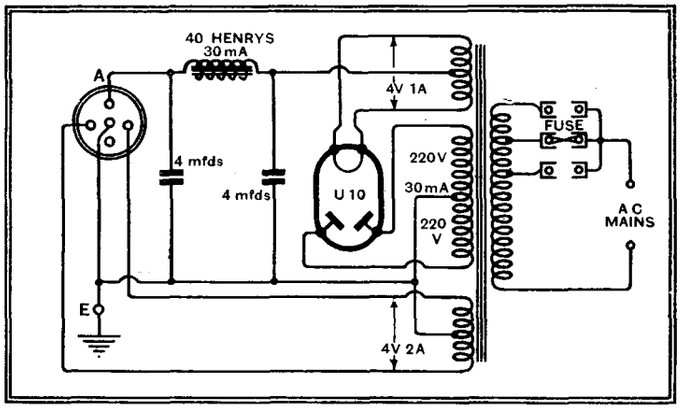

Fig. 2.—The power supply for the converter is derived from a separate unit, the circuit of which is shown above.

LIST OF PARTS.

Converter.

1 Two-gang short-wave condenser (special), **C1, C3** — **Cyldon "Bebe"**
with insulated sections each 0.00015 mfd.

1 Slow motion dial (two-ratio) moving scale pattern — **Polar Micro Drive**

1 Flexible coupler, reducing ¼in. to 3/16in. — **Cyldon**

1 Variable condenser, 15 m-mfd., **C2** — **Eddystone Microdenser**

1 Ebonite extension spindle, 3in. long — **Eddystone No. 943**

1 Semi-variable condenser, 20 m-mfd., **C4** — **J. B. No. 1050**
(Bulgin)

1 Pre-set condenser, 0.0005 mfd., **C11** — **Colvern**

1 Pre-set condenser, 0.001 mfd. max., **C8** — **Formo G.**
(Goltone)

5 Tubular condensers, 0.01 mfd., **C5, C6, C9, C10, C12** — **Polar N.S.F.**

1 Tubular condenser, 0.0001 mfd., **C7** — **Polar N.S.F.**
(Bulgin, Dubilier, Ferranti, Graham Farish, T.C.C., T.M.C. Hydra)

1 HF choke, short-wave type — **Eddystone No. 948**
(Raymart)

Resistances:

1, 10,000 ohms, 3 watts, **R5** — **Erie**
1, 10,000 ohms, 2 watts, **R6** — **Erie**
1, 10,000 ohms, 1 watt, **R7** — **Erie**
1, 50,000 ohms, ½ watt, **R4** — **Erie**
1, 5,000 ohms, 1 watt, **R8** — **Erie**
2, 250 ohms, 1 watt, **R1, R2** — **Erie**
1, 150 ohms, 1 watt, **R3** — **Erie**
(Amplion, Dubilier, Claude Lyons, Polar N.S.F., Watmel)

2 Valve holders, 7-pin S-W chassis type — **Bulgin SW42**
(Clix, Goltone)

2 Stand-off insulators — **Bulgin SW49**
(Raymart)

3 Switches, baseboard on-off toggle — **Bulgin S908**

1 Brass shaft, 5in. long, 5/32in. dia. — **Bulgin**

2 Knobs, ¼in. bore — **Bulgin K14**

1 Reducing sleeve, 5/32in. — **Bulgin**

1 Aluminium coil screen, 2in. x 2in. x 3in. — **Goltone R9/323**

Sheet aluminium, 1 piece, No. 18 SWG gauge, for chassis, 12in. x 14in.; 1 piece for screen, 7in. x 6in.

1 5-way Connector — **Bryce**

1 4-way Battery cable — **Goltone**
(Harbros)

1 plug, 5-pin — **Bulgin No. P3**
(Goltone)

4 Insulated terminals, Aerial, Earth — **Belling-Lee No. 1001**
Output +, Output −.

1 Length Screened sleeving, 2 mm. bore — **Goltone**
(Harbros)

1 Ebonite former, six-ribbed, 1in. outside dia., 3in. long — **Becol No. 3**

1 Ebonite former, six-ribbed, 1in. outside dia., 4in. long — **Becol No. 3**

1 Paxolin tube, 1in. dia., 2in. long — **Wright and Weaire**

Screws and rods:
40 6BA screws, c/hd., ⅜in. long with nuts; **4** 4BA screws, ⅜in. long; **2** 4BA 1in. long; **6** 4BA nuts; **5** ¼in. No. 4 R/hd. brass wood screws; **2** 1in. No. 4 countersunk brass wood screws; **1** length 6BA screwed rod, 3½in. long; **1** length 4BA screwed rod, 3½in. long.

Miscellaneous:
Quantity 4BA and 6BA Soldering tags, insulated sleeving and No. 18 and No. 20 SWG tinned copper wire, also quantity No. 20 DCC and No. 34 DSC wire for coils.

Valves: 2 Osram MX40
(Marconi MX40, Ferranti VHT4)

Power Unit.

1 Mains transformer, 220-0-220 volts 30 mA, 4 volts 1 amp., 4 volts 2 amps. — **Sound Sales**

1 Smoothing choke, 40 henrys 30 mA. — **All Power Transformers**
(Bulgin)

1 Block condenser, 4+4 mfds. 400 volts DC working — **T.M.C. Hydra B.1001**

2 Valve holders, 5-pin chassis type — **Bulgin SW.41**
(Clix, Goltone)

1 Terminal, E — **Belling-Lee No. 1003**

1 Sheet aluminium for chassis 12in. x 14 in. 18 SWG.

Valve rectifier: Osram U10
(Cossor, 506BU, Marconi U10)

Aluminium chassis, shaped and drilled to specification, are available from The City Accumulator Co.

One of the valves removed to show the position and method of mounting the input coils, L1, 2, 3, and 4.

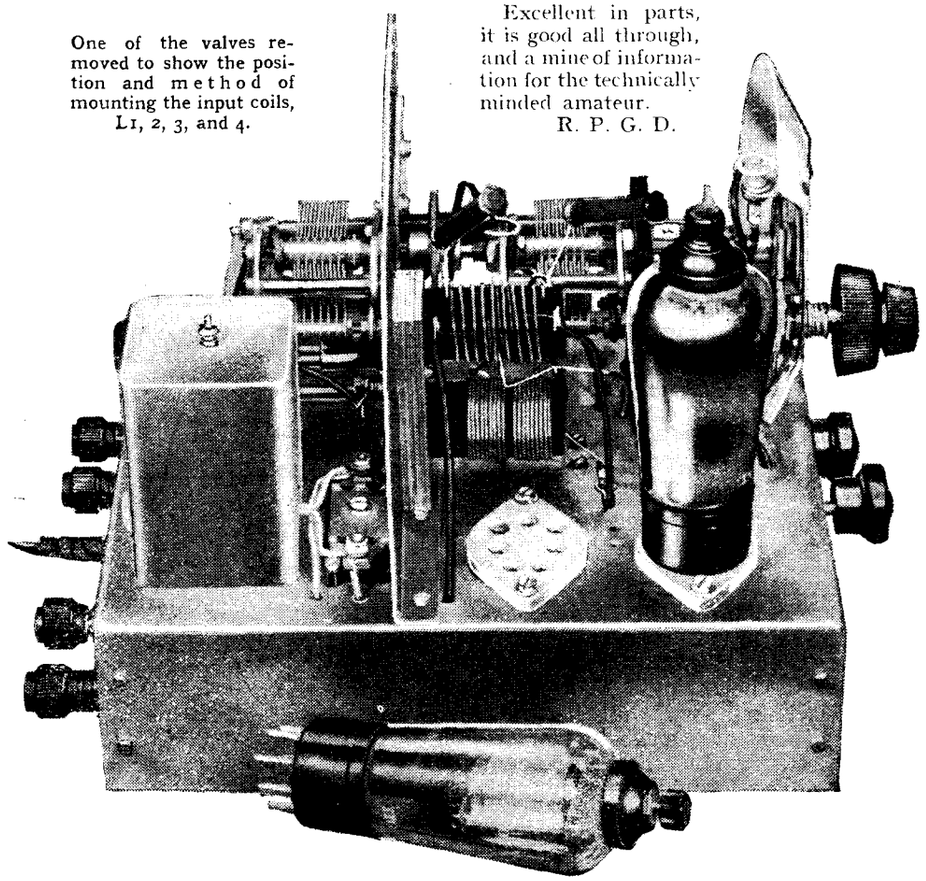

BOOK REVIEW

The Gramophone Record, by H. Courtney Bryson. Pp. 276. Ernest Benn, Ltd., Bouverie House, Fleet Street, London, E.C.4. 21s. net.

Truth, they say, will out, and here is Mr. Bryson with more proof of it. Crashing through the hedge of privacy with which gramophone-record manufacturers have hitherto surrounded their occupations, he lays them open to our inspection at long last, and does it so thoroughly as to set us wondering whether anyone with a sound knowledge of chemistry and electro-mechanics could set up a modern record factory with no more than this book to guide him.

While, however, Mr. Bryson's treatment of plastics is exhaustive, his description of recording technique is rather more in the nature of a useful summary of facts already published, and the final section on home-recording does less than justice to the subject.

Ignoring the mechanical difficulties, which make the cutting of uniform grooves a fairly expensive matter, it is not difficult to make records on cellulose having a quieter surface than that possessed by any commercial pressing, with the result that either the frequency range can be extended or the playing time increased by about one-third for an upper cut-off frequency of 7,000 cycles. Actually it is quite easy to record at constant velocity up to 10,000 cycles or more. The problem of reproduction is another matter—not confined to home-made records.

One or two transcription errors appear in the equations on pages 75 and 259, and if the expression "radiation resonance," on page 70, is not a misprint for "radiation resistance," it ought, for dimensional reasons, to be so regarded, for the quantity referred to is measured in mechanical ohms.

Excellent in parts, it is good all through, and a mine of information for the technically minded amateur.

R. P. G. D.

Wave Distortion in Receivers

PART I.

The Difference Between Frequency and Harmonic Distortion

By S. O. PEARSON, B.Sc., A.M.I.E.E.

IN this article the author gives a simple explanation of the fundamental difference between the two most common forms of distortion which are to be met with in receivers designed for telephony reception.

THE ultimate aim in designing a radio receiver is to obtain from the loud speaker a realistic reproduction of the original sounds picked up by the microphone of the transmitter to which the receiver is tuned. If the air vibrations emanating from the speaker were in every respect similar to those reaching the microphone absolute realism would be obtained, except for the absence of directional or stereophonic effect, which is only possible with binaural hearing of the original performance. In listening to an actual orchestra, for instance, the directions of sounds from the various groups of instruments are distinctly perceptible, and even with ideally perfect transmitting and receiving apparatus this effect is eliminated. It does not constitute a serious loss, however—listening to the music reproduced by the loud speaker can be likened to hearing the actual orchestra through a doorway leading to the auditorium, so that all the sound waves reach the listener from the same direction. In the case of a single musical instrument, or a speaker, the question of direction does not arise, and with our imaginary perfect apparatus the reproduced sounds would be identical with the original.

This ideal has never been attained in practice, as a certain degree of distortion is introduced at various stages of the transmission and reception; but even so, with really first-class design and high-grade apparatus, the reproduction of some classes of broadcast matter is so realistic as to be almost indistinguishable from the original performance.

It is not the object in this article to dwell on the points in design leading to realistic reproduction, but to give a simple outline of the two main forms of distortion arising when the design or operating conditions of a receiver are unsatisfactory, and to indicate how the two kinds can be distinguished from each other aurally when they are bad enough to mar the reproduction seriously. For an account of the conditions for faithful reproduction the reader is referred to *The Wireless World* of May 4th, 1934—"High Quality Amplification."

If the question of distortion is to be studied intelligently it is necessary to have a knowledge of the fundamental nature of the waves representing sound as regards their form and frequency. They may be either very simple or very complex, according to the nature of the sound; the note given by a tuning fork, for example, may be represented by a fairly simple wave, whereas the sound waves representing an orchestral performance are incomparably complex.

Let us consider in the first instance a simple sustained note, generally referred to as a pure tone, and represented by a sine wave. A properly designed electrically driven tuning fork gives approximately a pure tone. The sine wave representing such a note is given in Fig. 1 (a), where the horizontal axis denotes time and the vertical distances represent the displacement of an air particle from its normal position, positive in one direction and negative in the other. One complete sequence of positive and negative values constitutes one cycle, and the pitch of the note is determined by the number of cycles occurring in a second, that is, by the frequency. If the frequency is doubled, the pitch of the note is raised one octave; again doubling the frequency raises the pitch another octave, and so on. The intensity of the sound is determined by the maximum displacement in either direction, that is, by the amplitude of vibration.

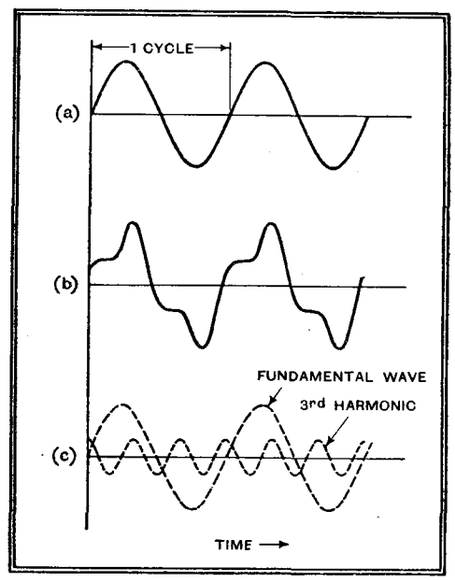

Fig. 1.—(a) Sine wave representing a pure tone. (b) Complex wave representing a sustained note. (c) Fundamental and third harmonic sine waves into which the complex wave (b) can be resolved.

Now let us turn our attention to a somewhat more complex wave like that of Fig. 1 (b). It has the same frequency as the sine wave immediately above and therefore represents a note of the same pitch, but owing to the irregularity of the wave the note is not a pure tone. Providing, however, that the complex wave repeats itself exactly cycle by cycle the note is a sustained one, such as that produced by an organ pipe or reed instrument, and for the present we shall consider only waves of this nature.

Combining Fundamental and Harmonic

Naturally a pure sine wave is very much easier to deal with than a complex wave, and for this reason it is most fortunate that any periodic wave, however complex the form, is actually equivalent to the sum of a number of pure sine waves, a complex sustained note being really the same thing as a number of pure tones occurring simultaneously. But the frequencies of these component sine waves bear a very definite relationship to each other. The most important of them has a frequency equal to that of the actual complex wave, this being known as the *fundamental frequency*. All the remaining component sine waves which go to make up the complex wave have frequencies which are exact multiples of the fundamental or main frequency, that is to say, their frequencies are exactly divisible by the fundamental frequency. These higher frequency components are called *harmonics*; that with double the fundamental frequency is the second harmonic (known as the first overtone in music), and with three times the frequency is the third harmonic, and so on.

In the complex wave under consideration there is only one harmonic—the third—and both this and the fundamental sine wave are shown in Fig. 1 (c). When these two are added together the sum gives the complex wave (b), and consequently the sound represented by the complex wave is equivalent to two pure tones, one with three times the frequency of the other, occurring together, *but it is heard*

Wave Distortion in Receivers—
as a single note of a certain quality. It is the presence of harmonics, and their relative strengths or amplitudes compared with that of the fundamental, that give a note its particular quality or timbre, whereas the frequency of the fundamental wave determines the pitch. Any change in the relative amplitudes of harmonic and fundamental waves alters the character of the sound.

Harmonics and Quality

The note of a violin is very rich in higher harmonics, and when an attempt is made to reproduce such a note through a receiver giving relatively low amplification of the higher frequencies the result is a "rounded" note of an entirely different character. It may be quite a pleasing note to hear but does not possess the characteristic crisp quality of the violin, owing to the partial suppression of the higher harmonic frequencies. This form of distortion is, unfortunately, very common, and in commercial receivers the failing is frequently glossed over by the statement that the receiver has a "mellow" tone! This may be perfectly true, but with such a receiver it is impossible to obtain realistic reproduction of all types of sound, speech being muffled, for instance.

Let us then consider what really happens to a more or less complex wave representing a sustained note when it undergoes distortion. There are two distinct ways in which such a wave can be distorted: (a) that in which the relative amplitudes of the component harmonic waves are changed with respect to the fundamental, as already indicated, and (b) where one or more additional harmonics are introduced into the original wave. These two forms of distortion are known as *frequency distortion* and *harmonic distortion* respectively, and are brought about by entirely different causes in a receiver.

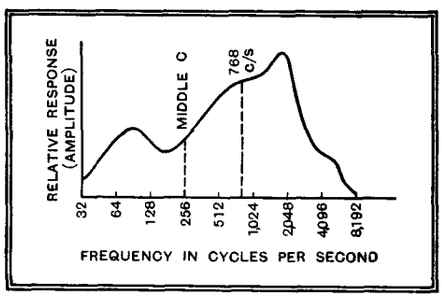

Fig. 2.—Amplitude-frequency response curve of an imaginary receiver.

Frequency distortion will be considered first. It is due to unequal response of the apparatus to different frequencies within the acoustic range, which extends from below 20 cycles per second to above 10,000 c/s. The main sources of unequal frequency response to different frequencies in a receiver are (i) the peak of the resonance curve in HF tuned circuits (sideband cutting), (ii) intervalve couplings possessing reactance, since the latter varies with frequency, and (iii) loud speaker characteristics. All of these combine to give an overall response curve which may be far from even if the design is indifferent.

Imagine that we have a receiver with an overall frequency response curve (including the loud speaker) like that of Fig. 2. Here the vertical ordinates represent the air pressure developed at a point opposite the loud speaker at different frequencies, the HF carrier wave to which the set is tuned being modulated to the same depth at all audio frequencies. This corresponds to a low-frequency input of constant amplitude and varying frequency. Frequencies are plotted to a scale of octaves, as is customary, because the relative pitch of two notes is determined by the *ratio* of their frequencies.

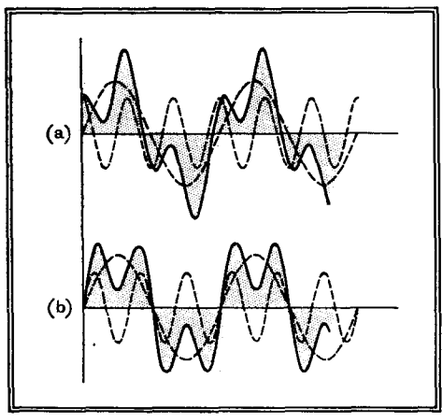

Fig. 3.—Possible output waves when wave (b) of Fig. 1 is applied to the receiver.

Now let us see what effect this receiver has on a note represented by the waveform of Fig. 1 (b) with a given fundamental frequency. It will be assumed that only frequency distortion occurs in the receiver. Suppose that the note in question is middle "C," for which the frequency is 256 cycles per second. The third harmonic contained by the wave will then have a frequency of $256 \times 3 = 768$ c/s. Of course, in practice it would be most unlikely that we should find a note containing only one harmonic, this being chosen here merely for clarity.

Phase Displacement

An examination of the curve of Fig. 2 shows that the response at 768 c/s is about twice as great as at 256 c/s, and from this it follows that the amplitude of the third harmonic of the input wave will be multiplied twice as many times as that of the fundamental. Initially the third harmonic amplitude was given as 33 per cent. of that of the fundamental, but after passing through the receiver the wave contains a 66 per cent. third harmonic.

Now the fact must not be overlooked that the relative phase positions of the fundamental and harmonic waves may have been changed in their passage through the receiver, and this is usually the case since the phase displacement in any AC circuit possessing reactance is a function of the frequency. If there were no phase displacement the fundamental and harmonic components of the output wave would be as indicated by the dotted line sine waves of Fig. 3 (a), their relative phase positions being the same as for the input wave as shown in Fig. 1 (c), but the amplitude of the third harmonic will have been doubled relatively. The resultant output wave then has the form shown by the full-line curve of Fig. 3 (a). This represents a single note with the same pitch as the original but with an altered quality or timbre. It will have a somewhat sharper sound.

When this change in harmonic content is also accompanied by a phase shift, that is to say, when the harmonic wave is moved along the base-line to a new position relative to the fundamental, as in Fig. 3 (b), for instance, the resultant wave is seen to have an entirely different shape, notwithstanding the fact that it is made up of the same two components. Visually the two complex waves at (a) and (b) in Fig. 3 are totally different, but the sounds represented by them are identically the same. The reason is that the two component frequencies act independently on different parts of the basilar membrane of the inner ear, and it is generally accepted that in a sustained note the relative phase positions of the various harmonics to the fundamental do not affect the nature of the sound. So the overall effect of frequency distortion on a sustained note, other than a pure tone, is a change in quality arising merely from the altered ratios of harmonic to fundamental amplitudes, phase-shift producing no aural effect.

An important point is the extent to which a given degree of frequency distortion is appreciated aurally. Fortunately the human ear is very tolerant in this respect and a surprising amount of distortion can occur before it becomes distressing. This is because the loudness of a note does not rise in proportion to the amplitude of the corresponding sound wave. The relative loudness of two notes of the same pitch, heard alternately, is roughly proportional to the *logarithm* of the ratio of the amplitudes of the corresponding waves. For this reason the decibel scale, which is based on the logarithmic law, is used in plotting response curves, to give a visual indication of the performance of the receiver more in keeping with what is actually heard.

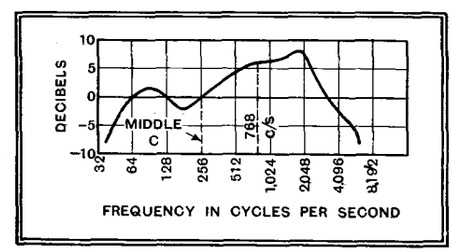

Fig. 4.—The response curve of Fig. 2 replotted to a decibel scale, giving a truer impression of the receiver performance.

In Fig. 4 the response curve of Fig. 2

Wave Distortion in Receivers—

is replotted to a decibel scale, the vertical distances now indicating approximately the loudness of all notes relative to middle "C" which is taken here as the standard of reference. If A and B are the *amplitudes* of two sound waves (or corresponding electrical variations), the volume level of B with respect to A in decibels is twenty times the common logarithm of the ratio B/A. So in the case we have been considering, where the relative amplitude of the third harmonic is doubled, the number of decibels gain is just over 6. It happens that the normal human ear is just able to detect a change in volume level of 1 decibel, so the 6 decibels gain in third harmonic content would be more than sufficient to produce a distinct change in the quality of the note.

This degree of distortion, of course, only occurs when the fundamental frequency corresponds to middle "C" with the given response curve. For instance, if the frequency of the note is lowered to 96 c/s, where the response is +1.4 db., the third harmonic (288 c/s) is seen to have a corresponding value of +0.8 db. It is therefore now 0.6 db. *below* the correct relative value, and this small deviation represents a negligibly small amount of distortion.

(*To be concluded.*)

Short-wave Broadcasting

THE simultaneous arrival of spring weather and spring "conditions" is always a little unfortunate. The owner of a good short-wave receiver is given his first opportunity of really excellent reception of long-distance stations during the evening, but rival attractions generally prevent him from taking advantage of it!

Earlier in the year the American stations in the 16- and 19-metre bands were fading out by 5 or 6 p.m., and nothing else of note could usually be heard until much later on in the evening. From now onwards, however, the 19-metre band should be excellent until 10 p.m., or even later, and the 25- and 31-metre bands should also be greatly improved.

W2XAD and W8XK (both in the 19-metre band) seem to be reaching their peak at present between the hours of 7 and 8 p.m.

The Eleven-year Cycle

The effect of the eleven-year sunspot cycle upon short-wave radio reception seems to be completely proved by the events of the past two years. 1933-34 should have been the "trough," and that winter certainly did exhibit some of the poorest conditions that we can remember.

The latter part of 1934 was very much better, and conditions on the amateur bands during 1935 suggest a continued improvement. The successful transatlantic contacts on 10 metres—for the first time since 1928-29—add still more force to the argument. Furthermore, anyone possessing a receiver that will tune down to 13.9 metres will find W8XK's transmission on that wave coming in at really amazing strength during most of the afternoon.

We should naturally expect the effect of the cycle to be greater upon the shorter wavelengths, and it is, to say the least of it, reassuring to find them coming back into a prominent position once more. The waves between 40 and 100 metres have not varied enormously throughout the whole of the period. Perhaps it would be more correct to say that a steady diminution in the efficiency of propagation of those wavelengths has been off-set by a steady improvement in receiving technique.

The "optimum" wavelength, however, should now begin to shift downwards, so that it will pay the short-wave listener to devote more attention to the 31-, 25-, 19-, and 16-metre bands from now onwards.

More New Stations

Rio de Janeiro, PRF5, on 31.56 metres, seems more consistent than on his other wavelength, and comes in well from 10.30 onwards. VP6YB, an amateur station in Barbados, is putting out experimental broadcast programmes on 42.5 metres—at the top end of the 40-metre amateur band. CR7AA, in Lobito, Lourenco Marques, is also broadcasting in the 40-metre band.

Additions to the 49-metre broadcast band include CO9GC, Santiago, Cuba, on 48.8 metres; PRA8, Pernambuco, Brazil, on 49.67 metres; HP5B, Panama City, on 49.75 metres; and OAX4D, Lima, Peru, on 51.9 metres.

MEGACYCLE.

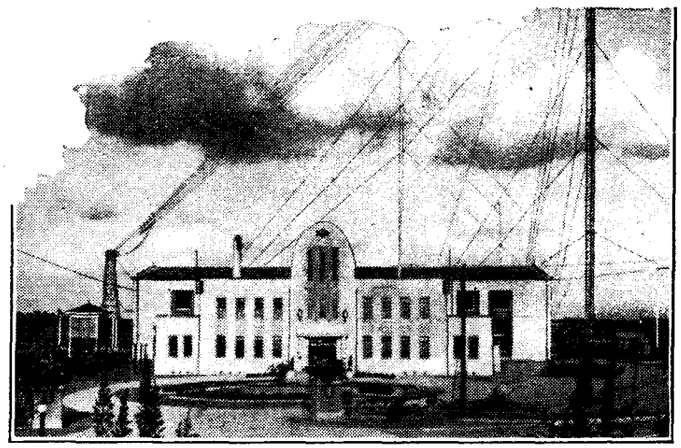

SHORT-WAVE LINK TO JAPAN. This striking building houses the Telefunken short-wave transmitter at Nagoya which maintains regular communication with Berlin.

Twenty Years Ago

Extracts from *The Wireless World* of April, 1915

Substitute for a Buzzer

"A recent number of the *English Mechanic* contains a rather amusing letter, referring to the Postmaster-General's notice concerning wireless apparatus. Mr. Howard J. Duncan, who writes the letter, states that it 'may interest some of our wireless amateurs to know that a fair substitute for a "buzzer" may be made by slipping the point of a dinner knife under a dinner plate till it reaches near the centre, and then operating the handle of the knife in the same manner as a Morse key. In this way it is possible to practise Morse without offending the Postmaster-General or infringing the Defence of the Realm Act.' We note that Mr. Duncan does not consider this quite equal to the regular 'buzzer,' and only recommends it as a 'stop-gap.'"

Waterspout Aerial

"One of the problems connected with the use of wireless on these craft (submarines) has been the rapid re-establishment of wireless communication after a dive. How far this has been solved we are not permitted to say, but reports in the foreign technical Press suggest that useful results have been obtained elsewhere by the aid of jets of salt water pumped vertically into the air. These novel antennæ are insulated from the sea by passing through a spiral tubing forming the coupling coil. Needless to say the waves set up on such aerials must be considerably damped and must have a limited radius of utility."

A Compact Wireless Receiving Set, by J. Stanley

"The set is enclosed in a box 12in. by 12in. by 10in. which contains everything necessary, viz., a loose coupled inductance, 3 variable condensers, made up of 26 separate condensers, 4 detectors, potentiometer, battery, and 'phones. . . . The block condenser is really 4 condensers of different capacity, being 3 plates, 4in. by 2in., 5 plates, 7 plates, and 9 plates respectively, connections taken to studs and switches on board, which will allow of any one condenser to be used, or almost any value from the smallest up to the full capacity of the two largest, to suit any 'phones. They are made in the usual way interleaved with mica or wax sheets, and connected as in Fig. 3.

The other 22 condensers, 11 each for the primary and secondary circuits are made up of thin zinc (obtained from an export match case) in the usual way and consist of No. 1, 3 plates 1in. square; No. 2, 3 plates 1¼in. square; No. 3, 3 plates 1½in. square; No. 4, 3 plates 1¾in. square; No. 5, 3 plates 2in. square; No. 6, 3 plates 2½in. square; No. 7, 3 plates 3in. square; No. 8, 3 plates 3½in. square; No. 9, 3 plates 4in. square; No. 10, 5 plates 4in. square; and No. 11, 7 plates 4in. square. Solder on flexible wires, long enough to reach the studs, and number them as you go on so that you get them to the proper studs, assemble, and box up, connections to be made as in Fig. 4, viz., No. 1 condenser to the second stud on primary circle, and so on. Make another set exactly the same for the secondary circuit, and repeat the connections to the secondary circle."

Kempe's Engineer's Year-Book, 1935. 41st annual issue (revised). Edited by L. St. L. Pendred.—A compendium of the modern practice of civil, mechanical, electrical, marine, gas, aero, mining and metallurgical engineering, containing formulæ, rules, tables, data, and memoranda. The matter is divided into technical and descriptive sections, and the treatment is practical rather than severely academic. Pp. 2,641, with numerous illustrations and diagrams. Published by Morgan Brothers, Ltd., 28, Essex Street, Strand, London, W.C.2. Price 31s. 6d. net.

Current Topics

Events of the Week in Brief Review

More Power from Brussels

THOUGH the belga has gone down, Belgian transmission power is going up. The Brussels broadcasting stations are shortly to be increased in power from 15 to 100 kilowatts.

Marconi Code Expert

DR. J. C. H. MACBETH, who devised and edited the Marconi International Code Book, died in New York on March 21st. Dr. MacBeth was an intimate friend of Marchese Marconi.

London Television Centre

IT is understood that, as forecast in *The Wireless World* of March 8th, the Television Advisory Committee has selected the Alexandra Palace as the first B.B.C. television transmitting station.

The Palace is one of North London's most prominent buildings, and is situated on a hill rising 324ft. above sea level. A description and illustration appeared in our issue of March 8th.

P.M.G.'s Certificate at 12

THE Empire's youngest licensed wireless operator is a girl—Madeline Mackenzie, twelve years of age, and she lives at Wynnum, near Brisbane.

Madeline, who uses the call-sign VK4YL, has just passed the P.M.G.'s proficiency test, involving not only a sound knowledge of Morse transmission and reception, but a good grasp of the theory of short-wave work.

Smellivision

THE "Deutschlandsender" entered into the spirit of April 1st by inviting listeners to apply their noses to their loud speakers to detect the odour accompanying a special test programme. In *Seiben Tage*, the official programme paper, photographs were shown of the beeswax records on which various scents had been preserved for transmission. By a happy accident the inventor had discovered that the odoriferous waves could be received on ordinary valve sets.

Radio Critics

CZECHOSLOVAKIAN journalists have created an Association of Radio Critics with the object of establishing a stronger bond between broadcasters and listeners.

Expensive Television

TELEVISION is too expensive, in the view of a committee set up by the Danish Parliament. In its report the committee states that a small country like Denmark cannot be expected to participate in costly research, but must wait for progress in other countries.

The Swiss Telegraph Administration also opines that television will be "very expensive," especially in a mountainous region like Switzerland where numerous transmitters will be essential. The British experiments are being watched with interest.

Wagner on the Road

TAXI radio is the butt of French humorists. Our contemporary, *Haut Parleur*, includes an illustration showing a fare angrily expostulating with the driver of a wireless-equipped cab for forgetting to stop at the Rue de Belleville. The driver apologises with: "Forgive me, I was carried away by the splendid Sonata in D Major!"

Nervous individuals are foreseeing the day when they will be wrecked to the "Tannhäuser" march or mutilated, without words, to Mendelssohn.

THE ONLY ONE? Fräulein Margarethe Nadrau, a Berlin shoe-saleswoman, who claims to be the only woman home radio constructor in Germany. And even Fräulein Nadrau is apparently unable to dispense with the blue print.

Prison for Oscillator

A COPENHAGEN resident found guilty of oscillation to an extent troublesome to the neighbours has been fined 25 kroner with an alternative of three days' imprisonment.

Easter Holidays

THE next issue of *The Wireless World* (April 19th) will be on sale on Thursday next.

The approach of the Easter holidays necessitates slight alterations in our printing arrangements, and small advertisements intended for the issue of April 26th should reach our publishers not later than first post on Thursday next, April 18th.

Radio as Current Consumer

RADIO adds appreciably to the amount of electrical current consumption. Figures adduced by the *Osram Nachrichten* show that some three million German receiving sets are operated from the mains. From this it is calculated that wireless reception consumes as much current as is required for ordinary uses by the cities of Dresden, Leipzig and Stuttgart, or as much as is used by 150,000 domestic cookers.

Pros and Cons of Static

THE suggestion that too little is known about electrical interference with broadcasting to justify legislation was put forward by Mr. Sven Norberg at an anti-interference conference recently held in Stockholm. The majority of speakers, however, opposed the idea, and one delegate, Dr. Hakan Sterky, urged that the problem of man-made static should be tackled with the same urgency as that of dangerous driving.

Television Development

IT is announced that a working agreement has been entered into by the television firm of Scophony, Ltd., and the well-known radio firm, E. K. Cole, Ltd. The Scophony Co., a private company, has been reconstructed and the capital increased to £140,000. The chairman is Sir Maurice Bonham Carter, and the deputy chairman, Mr. W. S. Verrells, chairman and managing director of E. K. Cole, Ltd.

Trolley Bus Static

THE Ministry of Transport has adopted an encouraging attitude in the matter of man-made static, and we understand that in future the Ministry's approval for new trolley buses will not be given unless devices have been fitted to eliminate radio interference as far as possible.

Officials of the Ministry attended during the recent stopper-coil tests on the Nottingham trolley bus system, in which the B.B.C. assisted with special transmissions from 12 midnight to 3 a.m.

Religious Radio

THE Archbishop of Prague recently consulted the Holy See with regard to religious broadcasting and received a reply indicating that religious transmissions were to be encouraged provided that it was clearly stated that listening did not absolve the listener from attending Mass. The Prague Catholic Church authorities have accordingly decided to increase the number of their religious transmissions.

UNBIASED

Teaching the Headmaster

I SEE in the papers that the headmaster of a certain young gentlemen's academy in the South of England has become so imbued with the spirit of radio that he has gone further than merely fitting each classroom with loud speakers to receive the B.B.C.'s school broadcasts.

During the Christmas holidays he had a concealed microphone fitted in the wall in a suitable position by the head of each boy's bed. These microphones are connected to a stud switch i.. his sanctum so that he can switch in any one or all of the microphones at will. In this

"Reaction to the day's teaching."

manner, he alleges, he hopes to find out from the boys' conversation their reactions to the doy's teaching.

I don't know what you think about it, but this action seems to me distinctly underhand. There is one thing of which, from recollections of my own schooldays, I can assure the headmaster in advance, and that is that this clandestine listening will most certainly give him what is vulgarly called an eye-opener, or perhaps, in this particular case, an ear-opener. He will certainly learn a few things.

A Record Wail

EVERY new invention brings fresh grist to the mills of the lawyers. One of the most prolific causes of invocation of the law has been the noisy loud speaker. Many local authorities have passed by-laws concerning it, but from what I have read in a reputable French journal legal action has not been confined to this country.

It appears that several years ago a French family man was annoyed and his baby kept awake at night by a typical French loud speaker pouring forth a typical French programme next door. Anybody who has ever heard a French programme reproduced by a French wireless receiver and loud speaker knows what this means. Friendly protests proving unavailing, recourse was had to the Law Courts, but owing to some legal quibble the court was unable to make an order for the nuisance to be abated. The losing party was not slow in taking the law into his own hands.

A few nights later the offending loudspeaker owner was disturbed in the small hours of the night by the lusty wailing of his neighbour's baby. He thought it strange that, although the baby had been in existence several months, he had not hitherto heard its nocturnal noises. Stranger still was the extreme punch and power behind the crying.

The strangest thing of all was that five years went by and, in spite of its increasing age, the child kept up the same wailing. The victim of the noise was at his wit's end, for a crying baby is not an offence against the law. At first he assumed that there were further additions to the family, but it has taken him five years to realise that he has never actually seen the supposed additions.

Recently he approached his neighbour's small son, who proved amenable to bribery. The state of affairs which the boy revealed has resulted in the present action in the French courts. It appears that five years ago, when the trouble began, the father of the family installed a powerful amplifier and a microphone with which to boost up the noise of the baby's crying. Not forgetting that his infant vocalist would eventually grow older and so cease to function as such, he had a gramophone record of the child's cries made, and it is this which has been used of late years. The action is to decide whether the noise institutes a legal nuisance.

What puzzles me is how the owner of the offending child could sleep through the din himself.

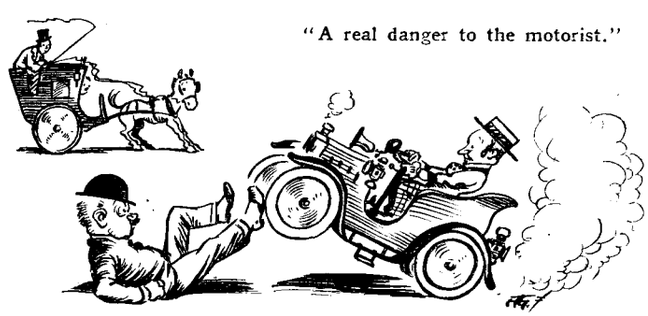

"A real danger to the motorist."

30 m.p.h.

INVENTORS are, I see, already busy with schemes to assist motorists to avoid unwittingly exceeding the new thirty-miles-per-hour speed limit. Various ideas have been suggested, such as lighting a warning signal on the dashboard or blowing an electric horn when the speed limit is reached.

One of the most novel schemes, however, is the coupling of the speedometer to the car radio set by a special switch so that the music is cut off when the car attains a speed of thirty miles an hour. Although certainly novel and ingenious, the idea is at fault, insomuch that it presupposes that every car is fitted with a set. Possibly the inventor is a radio manufacturer in disguise.

By FREE GRID

The scheme also pre-supposes that each set will normally be in use and so be in a position to be automatically turned off, but this is not an essential point, for the switch could be arranged so that the set was turned on if it happened not to be in use at the time or turned off if it were actually in operation.

The idea rather reminds me of the old American device in the early days of motoring when relatively high speeds in primitive cars were a real danger to the motorist. When the car attained a certain pre-determined speed a concealed gramophone was turned on, the record being Chopin's Funeral March or some even more appropriate tune.

Photocells and the Car Again

SEVERAL of my readers have written to me to say that they are worried as to what would happen to the lights of a car when in its garage at night if they made use of the invention to which I drew their attention the other week (March 29th). The less thick-skulled among you may possibly remember that this was a photocell device designed to switch on the lights of a car after darkness had set in so that motorists who leave their cars by the roadside in order to pop in and have one during the early evening may not fall into the clutches of the law owing to the lights of their cars remaining unlit after nightfall in the event of their tarrying longer than anticipated.

My correspondents are evidently under the foolish impression that if the car is put away for the night in a dark garage its lights will be kept on by the photocell, thus running down the car battery. Naturally I have thought of all contingencies, including even this one. Such a dire calamity to the car battery will, of course, be obviated by the simple expedient of leaving the garage lights on.

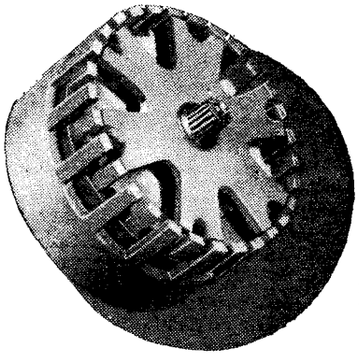

A small self-starting Ferranti motor, designed to run at 200 r.p.m. on 50-cycle supplies.

What is a "Sync"?

Speed of Rotation Controlled Electrically

By

"CATHODE RAY"

GRAMOPHONES — clocks — television! A varied assortment of goods, but some types of all of them work on the same principle. The common factor may not be obvious to the uninitiated. This article—and, in fact, all my articles—are intended first for the uninitiated; the people (bless them!) to whom it does not put things beyond question when one explains, for example, "that the armature angular velocity is in synchonism with the alternating magnetic field."

The essentials of a clock are one or more pointers or "hands" or (as in Broadcasting House) blobs that are rotated at a definite fixed rate for indicating the passage of time. If the hands depart from the appointed rate by even a small amount the clock ceases to be useful.

A gramophone requires the record to be turned round much faster than a clock, but at a perfectly constant rate; and, again, variations give rise to deplorable results.

A television receiver may or may not include some part that revolves, but in all cases it must repeat a certain cycle of work a definite number of times a second, and the slightest departure from this rate causes the picture to move across the screen in a distressing manner.

It is possible, for a surprisingly small sum, to buy apparatus that keeps approximately uniform time by means of an escapement wheel, pendulum, or governor. But each individual timekeeper depends entirely on itself as to how closely it keeps to the correct speed. A £50 chronometer is expected to be more successful in this respect than a 5s. alarm clock. But if a group of even the highest-priced instruments were kept going for 100 years without correction or adjustment it is probable that considerable discrepancies would appear.

Electrical Synchrony

If they were all geared together mechanically to a common master clock—like the various faces of Big Ben—they might not be perfectly correct, but they would at least all tell the same story. When the dials are situated in different houses all over the country a system of gearing from a master clock is obviously out of the question.

A 50-cycle AC electricity supply is one that gives 50 up-and-down impulses of current per second. It has been found desirable to link up the principal power stations with lines (the "Grid" system), so that if one supply is inadequate or fails altogether the others may contribute in the measure of their ability. But it would never do for one station to be putting out "ups" when the others are sending "downs"; it would be worse than one oar in an "eight" pulling the opposite way. Actually it is found that when the machines are once synchronised so as to be all perfectly in step, they are kept there almost as

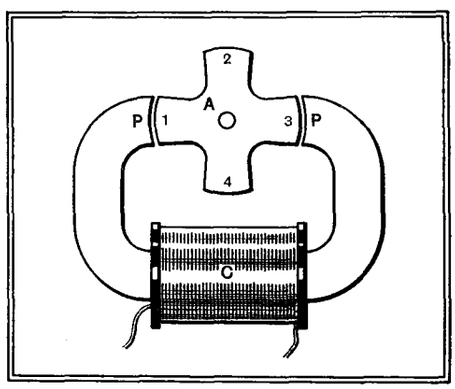

Fig. 1.—Explaining the action of the synchronous motor, of which the speed of rotation is unalterably related by the periodicity of the alternating current fed to the coil C.

rigidly as if there were actual mechanical gearing to couple them. Even when the power from one engine is cut off, the electrical part of the machine continues to go just as fast as before, but now it is taking power away from the mains instead of contributing it. If miniature machines were installed in every house and run from the linked electricity supply, they would all keep perfectly in step.

It requires very little thought to perceive that if these machines are geared down to drive clock hands, and if the generators at the power stations are kept running exactly at the proper rate, all the clocks keep perfect time. There is really only one clock to be kept right—the one controlling the electricity supply—and all the rest are merely clock faces repeating the indication. To drive a gramophone record at the proper 78 revs. per minute, or a television apparatus at its appointed speed, is merely a matter of different gearing.

The electrical part of the works of a synchronous motor, which is extraordinarily simple in essence, is shown in Fig. 1. An electro-magnet is specially shaped to have poles PP between which rotates an iron armature A. The coil C is connected to an AC supply. When the first impulse of current flows it magnetises the whole affair so that the armature is attracted into the position shown. The next impulse of current is in the reverse direction, and so magnetises the iron oppositely; but as there is no permanent magnetism, and both armature and poles are reversed at the same time (two negatives make a positive!), there is no repulsion, but attraction still, and the thing stays where it was.

Such a stationary condition excites no interest. But if the armature is given a buzz round with the fingers it may happen that by the time pole 1 on the armature is passing the stationary pole the current is beginning to die away, and that pole 2 is approaching when the current is starting to grow again. If so, any tendency for the armature to slow down due to friction is offset by the magnetic attraction. Again, pole 2 is not tempted to dally near P, because the current is fading away once more, and the impetus carries it past. And so on, indefinitely. The motor is non-self-starting, but keeps going once it gets into the swing of things. One is familiar with this in synchronised electric clocks and gramophone motors, which have to be given a push off; and if the current is temporarily interrupted they stop until they are attended to.

Speed of Rotation

A 50-cycle supply has 50 impulses per second each way, 100 in all; so the motor shown would make 25 revolutions per second, and 1,500 per minute. That is absurdly fast for any of the purposes mentioned, and besides making a lot of fuss and noise would necessitate very many stages of mechanical gearing. So some-

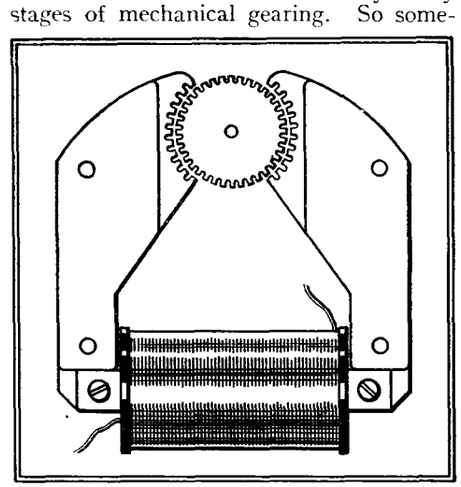

Fig. 2.—Construction of a practical slow-speed clock motor.

What is a "Sync"?—

thing more like Fig. 2 (which illustrates the well-known Ferranti clock) is adopted. There are 36 armature poles, which a little calculation shows to give a speed of $166\frac{2}{3}$ r.p.m. The number of subdivisions of the stationary poles is not significant in arriving at this result.

In a gramophone motor something of the same sort can be used, with gearing to get it down to the regulation 78 r.p.m.; or the turntable may be a mere extension of the armature, which necessitates 77 poles and gives 77.9 r.p.m. It is impossible to arrive at *exactly* 78 r.p.m. with 50 cycles, but it is near enough. Nor is speed control possible when the turntable is directly driven; but, on the other hand, it is impossible for the speed to depart from normal by more than the supply frequency variation. Observation has shown that the latter is not more than about 0.2 per cent. on controlled systems.

The working is somewhat different in television. Even when controlled mains are available, the accuracy and steadiness of the supply is not nearly good enough to keep a television image stationary. And even when the television transmitter is run from the same supply as the receiver there is a degree of flexibility in the "gearing" that causes swinging about the correct position. So the synchronising impulses have to be transmitted with the television.

A scanning motor is required to give far more power than a clock, and it would need a very big amplifier output actually to drive it. So what happens is that a non-synchronous motor is driven from the mains at approximately the correct speed, and the television-synchronising signals are applied in somewhat similar fashion to that shown in Fig. 2. The only power they are called upon to give is that necessary to overcome the small tendencies of the main motor to depart from strict exactitude.

"Harmonics"—A Correction

MY apologies are due to readers who have been confused by my too-close parallel between harmonics and octaves (in the article "Harmonics," March 22nd). A note an octave higher is truly a second harmonic, but a further octave brings one to *four* times the frequency, not three as stated; and therefore to the fourth harmonic.

Fig. 5 does, as stated, "make sure of it," showing correctly the relationships between the fundamental and first few harmonics.

It should also be noted that the paragraph to the right of Fig. 5 should read, "Now the fundamental frequency of a *violin* . . ."

DISTANT RECEPTION NOTES

WHEN I first read the announcement that work on Motala's new station was so far advanced that experimental transmissions after programme hours were to be begun almost at once I must confess that I did not find myself wildly excited. My log showed that evening after evening the Eiffel Tower, working but one kilocycle away from Motala's channel, had been received at big loud speaker strength.

What then could one hope for from the new Swedish station, even with its output rating of 150 kilowatts? But on the morning when these notes were written it was definitely, officially and finally announced that at last and at length the Eiffel Tower was to move forthwith to 206 metres. It is now well over a year since the immediate transfer of the Eiffel Tower to the bottom of the medium wave band was announced just as officially and just as definitely.

I shall, therefore, believe in the Eiffel Tower's turning over a new leaf when I hear it from my own loud speaker.

If the Eiffel Tower *does* go to 206 metres it will not be received with open arms by Radio Normandie, which has been using that wavelength for some time now. Fécamp will, I suppose, have to set out in search of a new wavelength, and whilst its wanderings are in progress all kinds of strange doings may be expected in the lower part of the medium wave band. Speaking of that chaotic belt of wavelengths reminds me that several of the stations within its limits either relay or are relayed by others which are usually well received. There are also other relays, present helps in time of trouble, of which the long-distance man should make a note if he is not already familiar with them.

The Turin programmes, for instance, are relayed both by Milan (1) and Florence as well as by Trieste. Milan and Florence nearly always come in well. If Vienna is weak or suffering from interference, Klagenfurt on 231.8 metres is often a useful second string to one's bow. Nürnberg has the same programmes as Munich, whilst Katowice can be used as a substitute for Warsaw or *vice versa*. Hitherto, the Swedish programmes have not been too well received in the more southerly parts of this country, for, as already mentioned, Motala has been jammed by the Eiffel Tower, whilst, despite its power, Stockholm is by no means a certainty; Göteborg is jammed by Algiers and Hörby often suffers from interference.

If Motala, with its five-fold increase in power is to be allowed to broadcast in peace, the excellent entertainment that the Stockholm studios offer should once more be ours for the tuning. I am glad to be able to report that Brussels (No. 1) has returned to form and is now well received on almost every evening. Brussels (No. 1) is a station that we could ill afford to lose for it puts out some first-rate entertainment. Its orchestral concerts are always particularly good. On the other hand, Beromünster has been poorish for some little time and lately it seems to have become more difficult than ever to receive. Frankfort must also be written off as a loss at the present time. Until recently it has come in well, though it works on a common wavelength. Now it is usually heterodyned and I suspect that Kharkov (No. II) is the offender. Unfortunately, Frankfort has no relay that is of any use: the only stations transmitting the same programmes are those which share its wavelength of 251 metres.

The number of stations giving good reception in this country has considerably increased during the past week or two, particularly on the long waves. D. EXER.

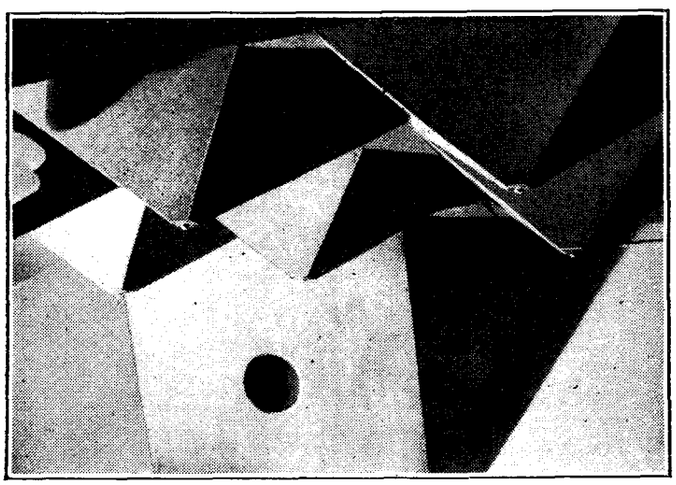

DEFEATING THE STANDING WAVE. This drastic ceiling treatment is not recommended for the ordinary home. The photograph was taken in a room in Berlin's Broadcasting House used for playing over new gramophone records.

CLUB NEWS

A Visit to Droitwich

The interest that radio is commanding in Coventry was commented on by Mr. V. M. Desmond (G5VM), of the R.S.G.B., in a speech at the recent annual dinner of the Coventry Short-Wave Radio Club.

Meetings of the Club are held every Tuesday, prospective members being welcomed.

On April 27 the Club will visit the Droitwich transmitters of the British Broadcasting Corporation. Full particulars can be obtained from the Hon. Secretary, Mr. C. Taylor, 28, Emerson Road, Stoke, Coventry.

American Reception with American Set

Members had an opportunity of trying out an American seven-tube all-wave receiver at the last meeting of the newly formed Chapter of the International DX'ers Alliance in Manchester. Seven U.S. short-wave broadcasting stations were heard at good strength.

Wireless World readers in the Manchester area can obtain full particulars regarding membership by writing to the Local Manager of the International DX'ers Alliance, Mr. R. Lawton, 10, Dalton Avenue, Thatch Leach Lane, Whitefield, nr. Manchester.

"My Quality Receiver"

Mr. R. P. Jonas applied this title to his demonstration of *The Wireless World* "Super Selective Six" at a recent meeting of the Croydon Radio Society. After describing the theoretical design of the receiver, Mr. Jonas gave practical examples of what it could accomplish in reception and in the reproduction of gramophone records, a piezo-electric pick-up being used. Few present had heard music and speech by wireless to better advantage.

Full particulars of the Society can be obtained from the Hon. Secretary, Mr. E. L. Cumbers, 14, Campden Road, South Croydon.

BROADCAST BREVITIES

By Our Special Correspondent

A Recording Problem

TO record or not to record is the question now agitating the "O.B." department in regard to the Jubilee Empire programme on the evening of Accession Day, May 6th. Largely resembling the Christmas Day exchanges, this Empire programme, devised and written by Laurence Gilliam and Professor Temperley, will include broadcasts from all the Dominions and some of the Colonies.

Shall the whole event be recorded in advance and put into cold storage, or would it be worth while to risk hitches for the sake of hot actuality?

For and Against

For some subtle reason, recording, whether for the films or the gramophone, is less nerve-racking for all concerned than a broadcast, though why this should be is not easily explained. There is this about a broadcast: that the worst error of speech or manner is over and done with when the sounds have winged their way through the ether. Not so in the case of a record, which can be a blot on somebody's escutcheon for all eternity.

The King's Speech

On the other hand, of course, a faulty record can be re-made, and this would be the object in view if Laurence Gilliam decides to "can" the Jubilee programme in advance.

The programme will conclude with the reply of His Majesty from Buckingham Palace.

The Prince of Wales at Cardiff

In Wales, Jubilee celebrations, designed not only to show the loyalty of the Welsh, but to express the Welsh spirit and character by nation-wide festivities and pageants, will culminate in a great display in Cardiff on May 11th, where the Prince of Wales will arrive by air at 11.0 a.m. He will place a wreath on the Welsh National War Memorial and afterwards lay the foundation stone of the new Administrative Buildings of the Welsh Board of Health. The Prince will also attend a children's festival on the International Rugby Ground and the Military Review at Sophia Gardens. Excerpts from as many events as possible will be broadcast.

Jubilee Times and Places

It is one more reminder of the dominating influence of broadcasting that municipal authorities have been earnestly enquiring of the B.B.C. regarding the times of the principal broadcasts during Jubilee week. Puddleton-in-the-Mould realises that the broadcasting of greetings from the Dominions might easily coincide with the opening of the Flower Show in the Big Marquee; even such flourishing places as Brightbourne and Whitepool will not risk a swimming gala clashing with an Address of Loyalty to the Throne.

IN THE KING'S HOUSE. One of the seven H.M.V. loud-speakers in the replica of the King's house at the Ideal Home Exhibition, Olympia. This one is in the study above a bookcase and concealed safe, and, like the others in the house, is operated from a Model 800 Autoradiogram in the hall.

Cycling Commentaries

AT seven o'clock on the morning of Silver Jubilee Day (May 6th) Mr. Philip Thornton will be out on the route of the procession in quest of material for the first of his six eye-witness impressions for listeners-in.

He will make his first broadcast at 8 a.m., when everybody is having breakfast, and he will be on the air again at 11 a.m., 2.45 p.m., 5.15 p.m., 6 p.m., 11.25 p.m., and midnight. Mr. Thornton will cover his round of many miles by bicycle, for he enjoys cycling in the heart of London.

"It is quite safe," he says, "and is really fast. By taking the back streets I can cycle from Broadcasting House to Piccadilly Circus in four minutes."

A New Annual

"THE B.B.C. next year may be handed over to commerce and get entirely out of control of men of discrimination in the arts; monopoly will rule; sentimentality will croon and croak; crook worship and murder will be extolled to the skies; and captains of finance will discuss 'healthy literature.'"

I quote these words by C. R. W. Nevinson in the new B.B.C. Annual for 1935, not to endorse his views but to show that the editor has given free rein to his contributors.

The extract is taken from "Forum"—the final section of this 192-page book.

Trumpet Blowing

The Annual offers an extremely thorough summary of B.B.C. activity from January to December, 1934, with a, possibly, pardonable amount of trumpet blowing—"The B.B.C.'s own Dance Orchestra has maintained its popularity," etc.—but the creative and really interesting section fills those fifty pages of "Forum" at the end, contributed by independent thinkers on certain major problems, artistic and social, which are bound up with the Corporation's future.

No Radio Stars ?

Professor Ernest Barker deals with the possibilities of international broadcasting, and Sir Arnold Wilson examines the question of "Free Speech." And there is Mr. Tyrone Guthrie discussing Radio Drama. "I do not," he says, "think that radio will ever have its Gables and its Garbos because, however luscious the voices, there always lurks a dreadful likelihood that the chins may be double, that the knees may knock."

These independent contributors wield brave swords.

Switch is Which ?

GOOD stories were showered on the Manchester and District Radio Trade Luncheon Club last week by Mr. Edward Liveing, the B.B.C. North Regional director.

A lady rang up the Manchester headquarters one evening asking: "When is this music going to stop as I want to go to bed?" They explained to her the use of the switch.

In the same week a listener wrote: "There has been no broadcast since last Thursday." When told the service had not been interrupted, she retorted that it *had*, "because my valves have never lit up."

New Broadcasting Orchestra

READERS of *The Wireless World* are always interested in the composition of a new broadcasting orchestra. An entirely new musical formation comes to the microphone on May 7th under the direction of Emilio Colombo to introduce "The Red Sarafan" — an imaginary restaurant of pre-war St. Petersburg with Russian patrons, Russian pastries and Russian actors.

The instruments are: Four violins, one pianoforte, one 'cello, one double bass, one harp, one oboe, one bassoon, one guitar, four balalaika, one bass balalaika and, of course, Colombo's violin. The orchestra will play for listeners approximately every three weeks.

Pye SE/AC Console

A Compact and Solidly Built Instrument Incorporating a Heavy-Duty Loud Speaker

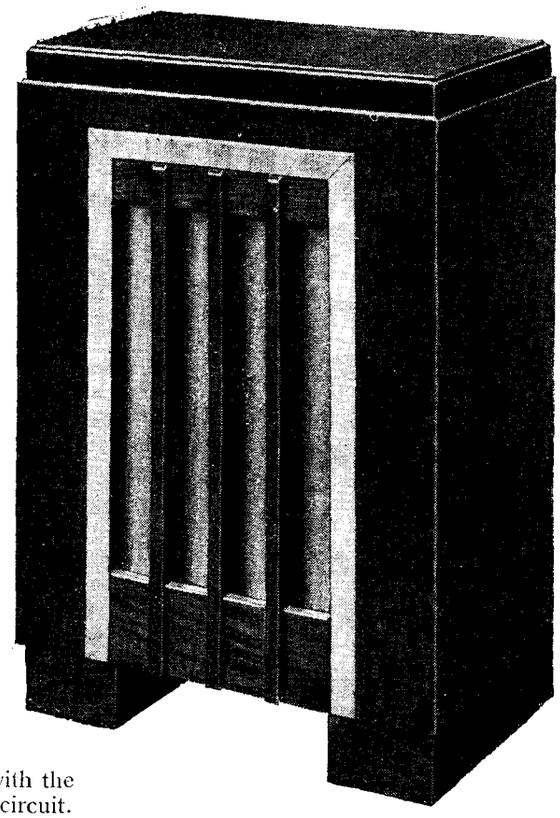

FEATURES.—***Type.***—*Console model superheterodyne receiver for AC mains.* ***Circuit.***—*Var-mu pentode HF amplifier—triode-pentode frequency changer—var-mu pentode IF amplifier—double-diode-pentode combined second detector and output valve. Westinghouse metal oxide rectifier.* ***Controls.***—*(1) Tuning. (2) Volume. (3) Tone. (4) Wave-range and on-off switch.* ***Price.***—*18 guineas.* ***Makers.***—*Pye Radio Ltd., Cambridge.*

ALTHOUGH the overall height of this set is only 30½in., the vertical lines of the front panel create the impression of a much more imposing cabinet. It is true that the loud speaker, which is mounted horizontally, is rather near the floor level, but the effects of this are not noticeable at a distance of more than 5 or 6ft. from the receiver. The compact dimensions of the cabinet, however, carry very real advantages from the point of view of bass reproduction, since it is much easier to obtain the rigidity necessary to prevent wood resonances. In the finish there is a departure from recent practice in Pye receivers and the dark walnut wood has been given a very high polish.

The receiver chassis is designed to operate from AC mains and the four-valve superheterodyne circuit comprises an HF amplifier, frequency-changer, IF amplifier, and combined second detector and output valve. Two tuned circuits, employing iron-cored coils, are associated with the signal-frequency HF stage, one being used in the aerial input circuit and the other in the coupling between the HF amplifier and the frequency-changer. Series inductances are included both on medium and long waves in series with the aerial feed to the tuned input circuit. These serve the dual purpose of levelling the sensitivity over the wave-range and also preventing break-through of medium-wave stations on the long waveband. A feed-back coil connected in series with the cathode circuit of the HF valve is coupled to the aerial inductances with the object of reducing second-channel interference.

The HF valve is of the variable-mu type and is coupled to the triode-pentode frequency-changer through a choke-fed tuned grid circuit.

Gramophone Amplifier

For the reproduction of gramophone records it has been arranged that the triode portion of the frequency-changer shall be used as a first LF amplifier, and the necessary switching has been incorporated to short-circuit the oscillatory circuits, apply the necessary bias and connect the output through resistance-capacity coupling to the pentode section of the output valve.

The IF amplifier, which, like the input HF amplifier, is a variable-mu pentode, operates at a frequency of 127 kc/s. Four tuned circuits are associated with the input and output couplings in this stage.

The remaining valve in the circuit combines the functions of second detector and output valve and also provides automatic volume control. The signal rectifying diode is fed from the secondary of the output IF transformer and the manual volume control is associated with the resistance capacity coupling to the pentode section of the valve. The AVC diode derives its input from the IF transformer primary, and a potential divider is arranged to give full control on the HF and frequency-

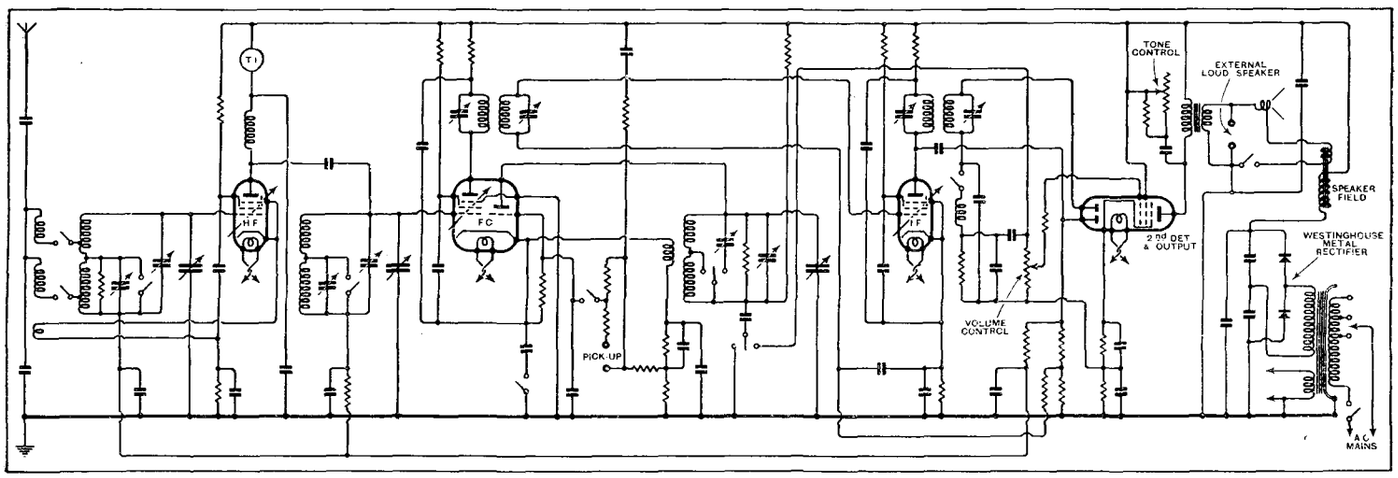

Complete circuit diagram. The triode portion of the frequency-changer is used as a first LF amplifier for gramophone reproduction.

Pye SE/AC Console—

changer valves and reduce control on the IF amplifier, where the input is, of course, much greater.

The output pentode is capable of delivering 2.8 watts with 7 per cent. total harmonic distortion. The primary of the output transformer is shunted by a variable resistance-capacity tone control, while the secondary is provided with sockets for the attachment of an external loud speaker. A switch is included behind the sockets so that when the plug is pushed fully home the internal loud speaker is disconnected.

The HT supply is derived from a Westinghouse rectifier and is smoothed by the loud speaker field in conjunction with electrolytic condensers.

Station Indicator

The controls are neatly grouped round the illuminated station indicator at the right-hand side of the top panel. The wave-range switch automatically illuminates the appropriate scale which is calibrated both in wavelengths and with an up-to-date list of the principal European stations. The pointer moves in a straight line and is unusually free from parallex errors. The scale itself appears to be a photographic plate, and in the event of further alterations in station wavelengths replacements will be available at the moderate cost of 2s. 6d. The tuning indicator "compass" is of the meter type and is separately illuminated. Incidentally, the movement is much better than is usual with this type.

The performance of the set in the matter of distant station reception is notable for the clarity with which stations of real programme value are received rather than for extreme sensitivity, with its inevitable accompaniment of background noise. The selectivity on medium waves gives clear reception in Central London outside two channels on either side of the two Brookmans Park transmitters. On long waves the programme value of the Deutschlandsender is much better than usual, and although there is inevitably some sideband interference from Radio-Paris and Daventry, this can be reduced to the vanishing point by careful adjustment of the tone control. Incidentally, the latter control was very evenly distributed and did not show the sudden drop in top response which is frequently noticed at a certain point in the tone controls fitted to many sets. The combination of a fixed and variable resistance in parallel in the tone control no doubt contributes to this good result. The volume control, too, is well graded, and has a really low minimum—an important point when the set is used near to a powerful station.

Both wavebands are remarkably free from self-generated whistles, and only one at 480 metres could be detected and then only with the volume control at maximum. There are no unpleasant sideband effects, as the set is tuned through a station and the AVC has a very wide range of control. In Central London the North, Western and Midland stations give exactly the same volume level as far as can be judged by the ear, while the volume from the local transmitters is only a few decibels higher. In the particular set tested there was a fairly considerable time lag in the action of the AVC after the set had been tuned to the local station. On moving the tuning control away from the local station approximately 4 seconds elapsed before the set reached its maximum sensitivity. As this effect only occurred on the local stations it did not produce any serious delay when carrying out a systematic search of the medium waveband.

The loud speaker used in this set is a very different affair from the mass-produced moving coil fitted to the majority of table receivers. The energised field magnet is really massive and the 9-inch diaphragm gives ample radiation of low frequencies without resorting to artificial resonance. The front panel of the cabinet is reinforced by a thick board of sound-absorbing material. The lower half of the set is open and there is no audible evidence of any resonance associated with the cabinet.

The really excellent bass response is balanced by a strong upper middle register. For general reception we found that the best results were obtained with the tone control turned down about one-third from the position of maximum brilliance, thus leaving a reserve of high note response in the region of 4,000 to 5,000 cycles to brighten such transmissions as appeared to need it. Transient sounds such as hand-clapping were exceptionally good and the reproduction of pianoforte music could not very well be improved upon.

This is a set which inspires confidence by virtue of its sound design and construction, its fullness of tone, and the apparently effortless manner in which the large number of worthwhile home and Continental stations are received.

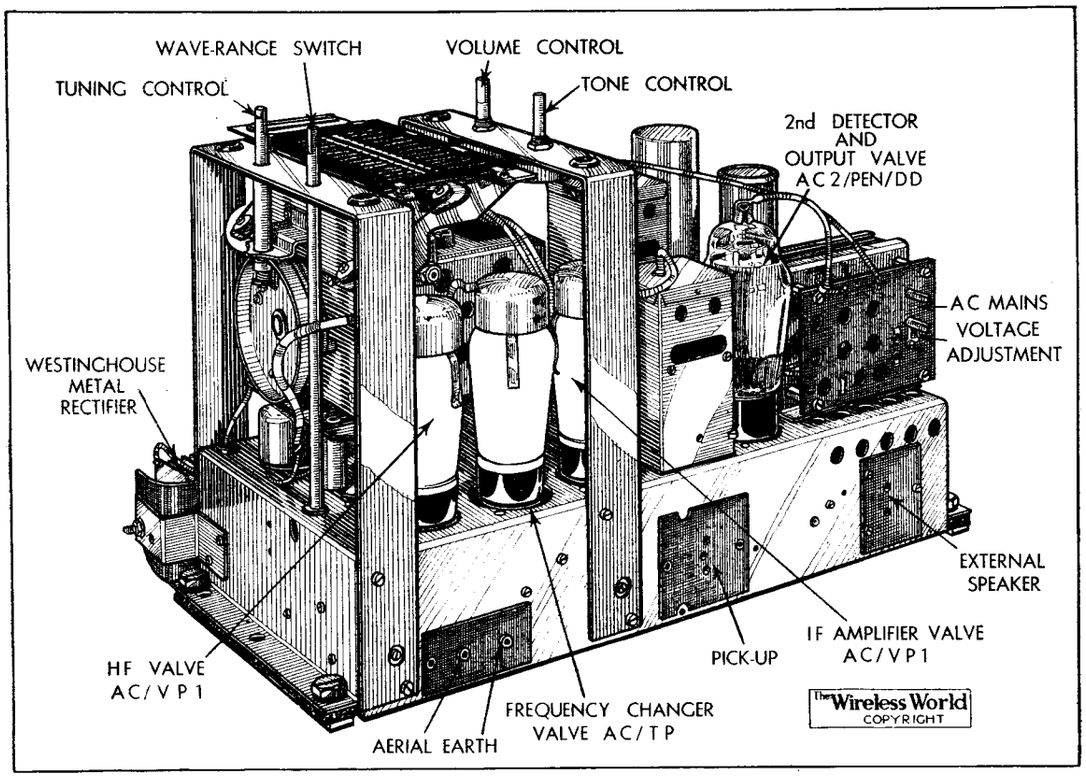

General view of the Pye SE/AC chassis. The vertical control spindles are grouped round the interchangeable station indicator, which is photographed on a glass plate.

Marconi and Osram Duo-Diode Output Pentode

A NEW output valve has just been released by Marconi and Osram. It is a pentode with characteristics similar to the N41, but it includes two diodes in the assembly for detection and AVC purposes. The valve is known as the DN41, and its heater consumes 2.3 amperes at 4 volts; it is rated for anode and screen potentials of 250 volts and an anode dissipation of 8 watts. The bias resistance should be 90 ohms and the recommended load impedance is 6,000 ohms, the power output then being 3.7 watts for 7.5 per cent. total second and third harmonic distortion.

The valve is fitted with a 7-pin base and the grid is brought out to a top cap, with the result that the grid-anode capacity is as low as 0.75$\mu\mu$F. The price is 21s.

★ ★ Listeners' Guide for t

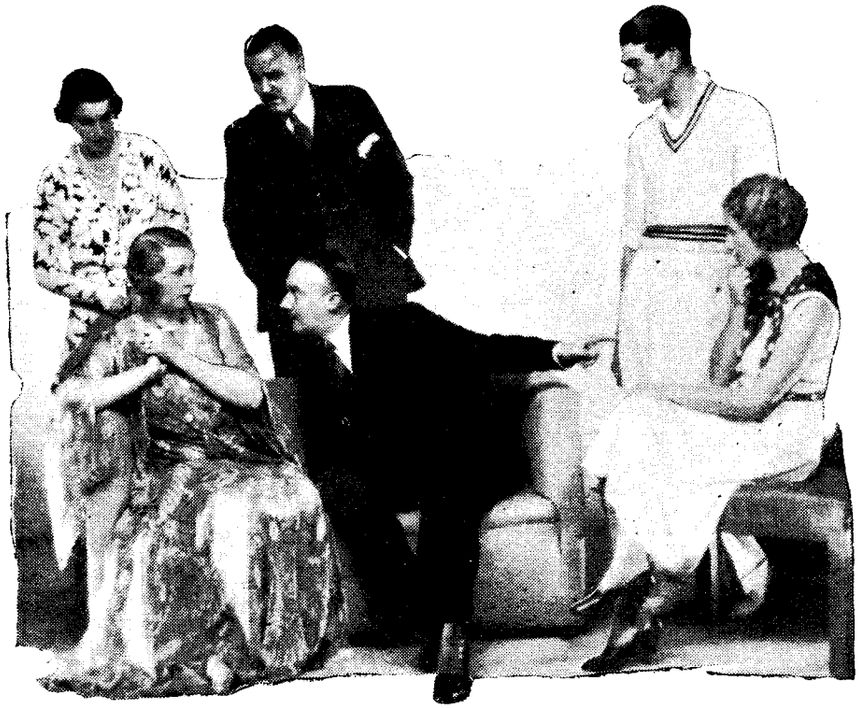

THE BREAD-WINNER EXPLAINS. Ronald Squire as Charles Battle surrounded by his family and neighbours in the original Vaudeville Theatre production of Somerset Maugham's play. "Ronnie" takes the same part in the broadcast versions on Monday and Tuesday.

SLACKING OFF?

It may be because the B.B.C. is at the crouch before leaping into the maelstrom of the Jubilee celebrations, but there seems to be, from a glance at the coming week's programmes, a perceptible slackening of *tempo*. Perhaps this is as it should be. Let the brilliants of Jubilee week coruscate the more from a subdued setting . . . but not too subdued.

"THE BREAD-WINNER"

The paramount microphone event of the next few days should be the production of "The Bread-Winner," the first full-length play by Somerset Maugham to be brought to the microphone.

"The Bread-Winner" should have considerable domestic appeal, particularly to fathers of families, and a good many of those who are a little weary of hearing the young "debunking" their elders and betters, who may find some amusement in hearing the same young being equivalently, and even more devastatingly, debunked themselves.

The action takes place in the drawing room of Charles Battle's home in Golders Green, Ronald Squire taking his original part as Battle. Other members of the cast include Mary O'Farrell as Margery, his wife; Peggy Ashcroft as Judy, his daughter; and John Cheatle as Patrick, his son. Val Gielgud is the producer.

"The Bread-Winner" will be broadcast at 8.30 p.m. on Monday (Regional), and 8 p.m. on Tuesday (National).

HOLY WEEK

With the approach of Holy Week there are numerous sacred programmes on the Continent. On Thursday next, April 18th, Brussels No. 2 will, at 8 p.m., relay a Holy Thursday service from Malines Cathedral. The St. Rombaut Choir will be conducted by Canon van Nuffel in Palestrina's "Stabat Mater" and Gregorian Chants. At 8.30 on the same evening Warsaw will relay Bach's St. Matthew Passion from the Philharmonic.

OPERA

There is no dearth of opera in the coming broadcasts from abroad. To-night (Friday) at 9.15 Budapest will relay Act III of "Tannhäuser" from the Royal Opera House, and to-morrow at 6.25 Vienna relays the whole of Smetana's "The Bartered Bride" from the State Opera. On the same night Rome relays Wagner's "The Mastersingers" from 8 o'clock onwards.

Strasbourg offers Saint-Saëns' opéra comique, "La Princess Jaune" at 9.30 on Monday next. Verdi's "La Traviata" comes from Radio-Paris at 8 p.m. on Wednesday, April 17th, and on Thursday Donizetti's "Elixir of Love" comes from Monte Ceneri at 8.

NATIONAL MUSIC

National music figures in a number of transmissions in the coming week. A concert of French music will be given by Strasbourg at 7.30 this evening (Friday). At 8 o'clock Cologne broadcasts a concert of Spanish music by Turina, Falla, and others. Scandinavian music will be played by the Monte Ceneri station orchestra at 9.15 on Tuesday, the 16th, the programme including music by Gade, Järnefelt, Grieg, Sinding, and Olsen.

SUMMERTIME IN APRIL

The Fol-de-Rols concert party continues the good work of helping us to forget the rigours of spring. This "Seaside Summer Show" comes on the air again at 8.30 (National) on Monday under the direction of George Royle and Greatrex Newman. Unpack the deck chairs, shut your eyes, and listen to Marriott Edgar, Will Kings, Connie Clive, Peggy Desmond, and Irene North, backed up by the B.B.C. Variety Orchestra under Kneale Kelley.

FLAUTIST

Whenever the item "Flute Recital by Miss Edith Penville" appears in the programmes, my mind travels back to the early days of 1923. Edith Penville was one of the first broadcast soloists, the art of the flautist being in special demand in those days when string tone was almost impossible to reproduce on the loud speaker.

30-LINE TELEVISION

Baird Process Transmissions,
Vision, 261.1 m.; Sound, 296.2 m.

SATURDAY, APRIL 13th
4.30–5.15 p.m.

John Rorke (songs); Joan Carr (songs); Olivette and Barrichat (dances); Dudley Rolph (songs and dances); Georgie Harris (stage and screen comedian); Sydney Jerome's Quintet.

WEDNESDAY, APRIL 17th
11–11.45 p.m.

Tessa Deane (songs); John Hendrik (songs); Laurie and Tom Devine (dances); Max Kirby (songs and dances); Sydney Jerome's Quintet.

Listeners should not miss her recital in the National programme on Monday evening.

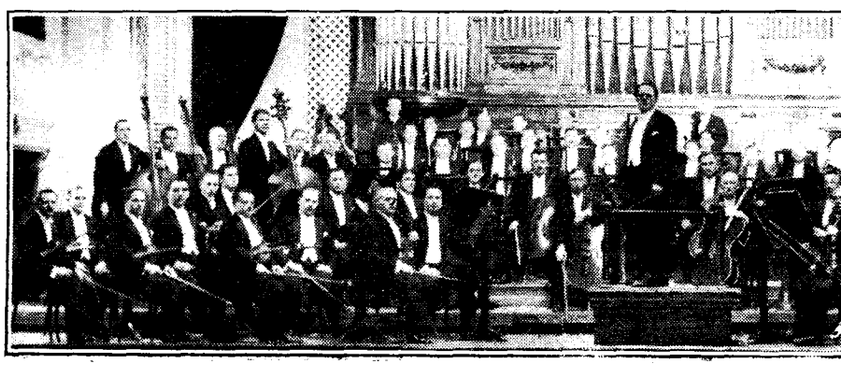

The Week

Outstanding Broadcasts at Home and Abroad

NELSON KEYS IN "THE APRIL REVIEW"

BURNS might have been thinking of the B.B.C. monthly Revues when he wrote: "Pleasures are like poppies spread, You seize the flower, its bloom is shed." Why are these really tip-top productions shelved for eternity after one broadcast?

However, better once than never. At 10 p.m. on Wednesday (National) we have Nelson Keys in the April Revue, with music by Jack Strachey and additional numbers by other composers. A sparkling cast includes Sylvia Leslie, Patrick Waddington, Hermione Gingold, Joan Carr, and the Radio Three, and the B.B.C. Variety Orchestra will be conducted by Hyam Greenbaum.

SCOTS SONGS FROM NORWAY

A BRITISH singer, Mr. Loudon Greenlees, will be heard in the Oslo programme this evening (Friday) at 7 p.m. in a recital of old Scots and English songs.

MELSA AND THE EMPIRE ORCHESTRA

ONCE again the B.B.C. Empire Orchestra comes out into the open, under the direction of Eric Fogg, in a special programme of light British music on the Regional wavelengths on Tuesday next. The leader of the Empire Orchestra is Daniel Melsa, the celebrated violin soloist.

CARNIVAL IN NEW GUISE

"INQUEST on Columbine" will be broadcast in the Regional programme on April 17th and in the National programme on April 18th.

It is an all-musical play based on Compton Mackenzie's "Carnival." The book has been prepared by James Dyrenforth and the music written by Kenneth Leslie-Smith.

As those who heard the first broadcast of "Carnival" will know, the story is a tragedy of the eternal triangle. The play develops in operatic form, the most notable numbers being the chorus of Jenny and the girls in the dressing-room scene, Trehelier's song about Cornwall, Jenny and Maurice's first duet, the ball scene, the parting of Jenny and Maurice, and the trio which ends the play. The music has been orchestrated by Julian Burger.

APRIL REVUE. Nelson Keys presides over Wednesday's late night Revue at 10 p.m. (National) with Hermione Gingold (inset), Sylvia Leslie, Patrick Waddington, Joan Carr and the Radio Three.

BACH CELEBRATIONS

BACH lovers have ample opportunities to feast themselves during the coming week. The anniversary celebrations are continuing in the Foundations of Music series.

Unfortunately, some of the most ardent Bach "fans" (if the term is not sacrilegious) are unable to get to their loud speakers at the early evening hour of 7.5.

The Sunday evening orchestral concert offers a compensation, for I see that it includes Bach's Triple Concerto in A Minor, the soloists being Robert Murchie (flute), Jean Pougnet (violin), and Harold Samuel (pianoforte). Section B of the B.B.C. Symphony Orchestra will be conducted by Hermann Scherchen.

THE WARSAW PHILHARMONIC, one of the best-known orchestras in Europe, will be heard to-morrow evening (Saturday) at 7.15 in Beethoven's Leonora 3 Overture and the Eroica Symphony. The conductor will be Bruno Walter.

THE VOICE ALONE

"IT is too bad," writes a Copenhagen correspondent, "that *Wireless World* readers do not understand Danish, for they would be charmed by a talk on Sunday evening at 6.30 to be given by Mr. C. V. Bramslaes, Director of the Danish National Bank, who will talk about the International Labour Movement. *But do take the chance of hearing his voice.*" THE AUDITOR.

HIGHLIGHTS OF THE WEEK

FRIDAY, APRIL 12th.

Nat., Chateau de Madrid. ¶B.B.C. Orchestra (D). ¶Concert of Contemporary Music.

Reg., Opera: "The Travelling Companion" (Stanford), Act I. relayed from Sadler's Wells. ¶"Three Moods of Fame," by Lord Dunsany.

Abroad.

Stuttgart, 9.45, Lyric Drama: "Manfred" (Byron), with music by Schumann.

SATURDAY, APRIL 13th.

Nat., In Town To-night. ¶Music Hall. ¶B.B.C. Theatre Orchestra.

Reg., B.B.C. Orchestra (C) with S. Rascher in Saxophone concerto (Larsson). ¶Pianoforte Recital by Pouishnoff. ¶Henry Hall's Guest Night.

Abroad.

Rome, 8, Opera: "The Mastersingers" (Wagner).

SUNDAY, APRIL 14th.

Nat., Violin Recital by Melsa. ¶Reginald King and His Orchestra. ¶Folkestone Municipal Orchestra. ¶Leslie Bridgewater's Harp Quintet.

Reg., B.B.C. Orchestra (C), conducted by Julian Clifford. ¶B.B.C. Military Band, conducted by B. Walton O'Donnell. ¶Sunday Orchestral Concert. Conductor: Hermann Scherchen.

Abroad.

Toulouse, 9, Concert Version of "Tosca" (Puccini).

MONDAY, APRIL 15th.

Nat., Flute Recital by Edith Penville. ¶The Fol-de-Rols Concert Party. ¶B.B.C. Orchestra (E) conducted by Joseph Lewis.

Reg., B.B.C. Dance Orchestra. ¶Pianoforte Recital by Stefan Askenase. ¶"The Bread-Winner."

Abroad.

Warsaw, 8, Concert by prize-winners in the Wieniawski International Violin Competition.

TUESDAY, APRIL 16th.

Nat., "The Bread-Winner." ¶"Freedom," talk by J. A. Spender. ¶Serge Krish Septet.

Reg., B.B.C. Orchestra (E) conductor: Frank Bridge. ¶Variety from the Coventry Hippodrome.

Abroad.

Kalundborg, 10, Italian Opera Music by the Radio Orchestra.

WEDNESDAY, APRIL 17th.

Nat., 8.15, B.B.C. Symphony Concert. Conductor: Sir Hamilton Harty. 10, Nelson Keys in "The April Revue."

Reg., The Vario Trio. ¶Salt Sea Ballads by the B.B.C. Male Voice Chorus. ¶"Inquest on Columbine."

Abroad.

Radio-Paris, 8, Opera "La Traviata" (Verdi) from the Opéra.

THURSDAY, APRIL 18th.

Nat., 8, "Inquest on Columbine." ¶Gershom Parkington Quintet. Sinclair Logan (tenor).

Reg., "Indiscretions of Archie"—2. ¶"A Variety of Music," with the B.B.C. Variety Orchestra. ¶Kutcher String Quartet.

Abroad.

Kalundborg, 10.15, Folk Music of Other Lands.

Foundations of Wireless

Part XVIII.—Problems of High-Frequency Amplification

THIS instalment deals with the basic problems of HF amplification, and explains clearly why certain methods, superficially attractive on account of their extreme simplicity and cheapness, cannot give worth-while results in practice.

By A. L. M. SOWERBY, M.Sc.

AT the end of Part XVII we saw that reaction, if delicately handled, could be made to reduce the resistance of a tuned circuit almost to vanishing point. Nevertheless, we came to the conclusion that it was not a satisfactory means of enhancing the sensitivity of a receiver to any very marked degree on account of the undue accentuation of selectivity that accompanied its use. It remains invaluable for neutralising the losses due to detector damping, and may, without serious detriment to quality, be pressed far enough to halve or even quarter the natural resistance of a tuned circuit, but much greater amplification than this is needed for the successful reception of distant transmitters.

Amplification by a valve is the only alternative to reaction. A valve may be used in either of two ways: it may be applied to amplify the modulated high-frequency signal before detection (high-frequency amplification) or it may be made to amplify the detected low-frequency signal (low-frequency amplification). The choice between these two alternative methods is dictated by the characteristics of the detector.

We know that a large signal can be detected with less distortion than a small one; it is also true, though no stress has been laid on the point, that any detector is very insensitive to really weak signals. Unamplified signals from a distant station (a millivolt, or less) would swing the grid of a detector over a portion of its curve so small that it would be virtually a straight line over that tiny range. We are driven, therefore, to amplify weak signals before detection in order to provide sufficient input to operate the detector satisfactorily.

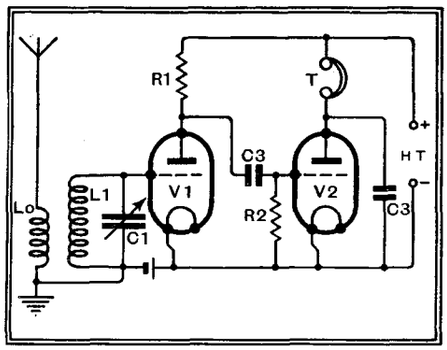

Fig. 96.—The resistance-coupled HF amplifier is of little more than academic interest.

At first sight it might seem that, since a resistance behaves alike to currents of all frequencies, one would obtain very satisfactory results by coupling valves together for high-frequency amplification in the manner suggested in Fig. 96. Here is shown a stage of resistance-coupled amplification preceding the detector valve V2. The valve V1, receiving its signal from the secondary of the aerial transformer LoL1, produces an amplified voltage across the resistance R1 in its anode circuit. This voltage is conveyed to the grid of V2 through the condenser C2, which, while readily passing HF currents, protects the grid of V2 from the steady positive voltage at the anode of V1.

If one could build this receiver without departing from the strict letter of the circuit diagram it would work very well. Unfortunately, there appear in a practical set the stray capacities already discussed in connection with the detector (Part XVI). These are shown, in detail, in Fig. 97. It should be noted that C5, since it runs from grid to a point where there is an amplified high-frequency voltage to some extent at least out of phase with that at the grid, takes a larger current than it would had it only the grid-cathode potential across it. It may therefore be regarded as equivalent to a much larger condenser connected between grid and cathode.

Two Reasons for Failure

All these paths, since they run from anode of V1 or grid of V2 to earth or HT+, both of which are equally points of zero signal potential, may be lumped together and regarded as being in parallel with R1. They make, in an average case, a total of 40$\mu\mu$F. or more, which provides at 1,000 kc/s a path of reactance about 4,000Ω. This sets an upper limit, irrespective of the value adopted for R1, to the anode-circuit load of V1. With so low a load V1 will not provide very high amplification; one may expect a gain of about five times with an average valve.

But even this is not the worst fault of the circuit of Fig. 96. The anode circuit of V1 being predominantly capacitative, it damps the tuned circuit L1C1 rather heavily. In the case of the detector, we reduced this damping to reasonable limits by inserting a condenser direct from anode to earth in an attempt to reduce the high-frequency voltage at the anode as nearly as possible to zero; we were then wanting only the rectified audio-frequency signals. In the present case we obviously cannot do this, and, in consequence of the development of an appreciable high-frequency voltage, V1 is equivalent to a damping resistance of the order of 6,000Ω across the tuned circuit. If the initial dynamic resistance of this, undamped, were 120,000Ω, the introduction of this damping would reduce the voltage across it to less than one-twentieth.

With V1 amplifying this reduced signal five times, the voltage finally delivered to V2 would be one-quarter of that developed across L1C1 unloaded. On the whole, not a very successful amplifier!

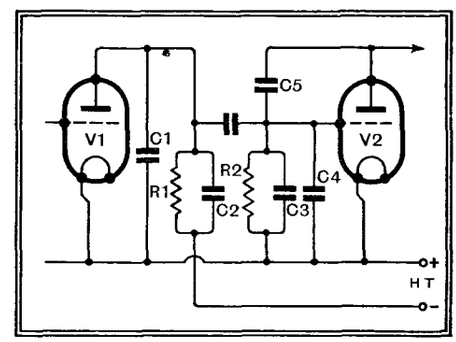

Fig. 97.—Why Fig. 96 will not work. C1, anode-cathode capacity of V1, holder, and wiring; C2, C3, capacity across R1 and R2, with their wiring; C4, grid-cathode capacity of V2, with holder, etc.; C5, anode-grid capacity of V2. All these are in parallel with R1.

The replacement of R1 by a high-frequency choke, making a choke-coupled amplifier, leaves the problem untouched; the faults of the circuit lie in the stray capacities across the anode load and in the anode-grid capacity of the valve and not in the type of coupling used.

But if we can find a coupling with which to neutralise the effects of the stray capacities we shall be in a better position. In an earlier theoretical section we saw that if an inductance and a condenser are placed in parallel across a source of HF voltage, the currents they draw are out of phase by 180 deg., making the total current equal to the difference of the individual ones. Evidently, an inductance is called for in our amplifier, and since we desire to neutralise these stray capacities exactly, we shall have to choose an in-

Foundations of Wireless—

ductance which has a reactance $2\pi fL$ equal to that of the stray capacities, which is $1/2\pi fC$.

Since the reactance of a coil rises, and that of a condenser falls, with rising frequency, it is clear that any one value of

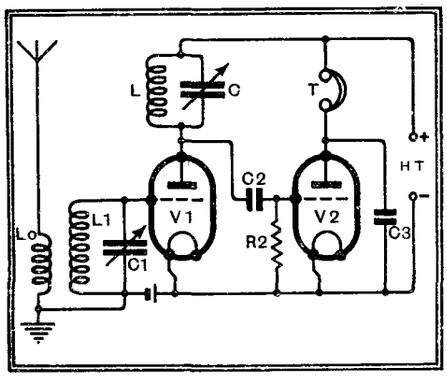

Fig. 98.—Tuned-anode HF coupling. Compare with Figs. 96 and 97, and note that the various stray capacities are now in parallel with C and so form part of the tuning capacity.

L can only be made to balance the stray capacities at one individual frequency—which is, of course, the frequency to which the combination is tuned. To maintain the balance over the whole range of frequencies—perhaps 1,500 to 550 kc/s—covered by the tunable circuit L1C1, it will be necessary to readjust the value of L every time the receiver is tuned to a new wavelength.

Tuned Anode Coupling

This method is a possible one, but since we have in L and the stray capacities a tuned circuit, there is really no reason why L, rather than the capacity, should be made variable. We can therefore give L a fixed inductance low enough to neutralise, or tune with, the stray capacities at the highest frequency we wish to receive, and augment the capacity artificially by means of a variable condenser so as to maintain the balance, or keep the circuit tuned, at the lower frequencies. This brings us to the circuit of Fig. 98, which is called the *tuned-anode* circuit.

The diagram shows that LC is connected, as a complete circuit, between the anode of the valve and its battery. The stray capacity in parallel with this now has no more effect than to make it necessary to reduce C itself a little below the value at which tuning would be attained in the absence of the strays. The whole forms a simple parallel tuned circuit. For the frequency of resonance we have seen that this behaves as a pure resistance R, the dynamic resistance L/Cr of the circuit. We have therefore worked our way back, so far as the electrical behaviour of the system is concerned, to the unrealisable resistance-coupled arrangement of Fig. 96. The amplification given by a tuned anode stage will be that calculated from the simple formula $A=\frac{\mu R}{R+Ro}$ given in Part XIII for a resistance-coupled stage, but we must now interpret R as the dynamic resistance of the tuned circuit.

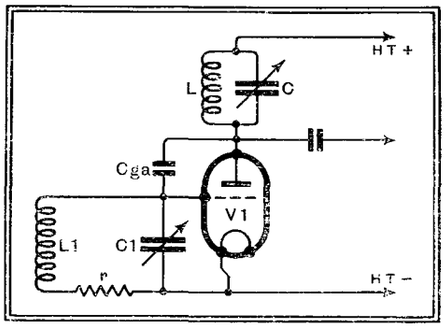

Fig. 99.—The grid-anode capacity of V1 introduces difficulties into the working of the tuned-anode circuit.

We have found a remedy for the effects of stray capacity in limiting amplification, for the circuit of Fig. 98 will give a gain of some 25 or 60 times with battery or mains valves respectively, even if R is no more than 100,000 ohms. It remains to be seen whether the anode-grid capacity is equally harmless.

So long as the anode circuit is exactly tuned to the frequency of the signal being received, the anode circuit of the valve will be purely resistive, and voltage fed back through Cga (Fig. 99) will neither assist nor damp down the voltage on the grid. If the applied frequency (or alternatively the capacity of C) is now increased, slightly more current will flow through C than through L, so that the anode circuit becomes capacitative. The fed-back voltage will then, as we have seen, tend to damp out the signal.

If, on the other hand, the applied frequency (or alternatively the capacity of C) is reduced, more current will flow through L than through C, giving us an *inductive* anode circuit. Now the coupling between the two tuned circuits provided by Cga will feed back energy that assists and builds up the voltage already present. In discussing reaction we saw that energy fed back into a tuned circuit could be made to reduce the effective resistance of that circuit almost to zero by supplying energy almost as fast as it was dissipated in the natural circuit resistance r. Suppose we feed back energy *faster* than it is being used up, making the effective resistance of the grid circuit *negative*.

If this happens, any slight current present in L1C1 will grow by virtue of this excess energy, and will go on growing as long as the valve continues to feed back more energy than is dissipated in r. Since rising volts on the grid produce proportionately rising volts on the anode, the current in L1C1 will continue to increase until this proportionality breaks down, which will only occur when the voltages are so large that the excursions of either anode or grid voltage are such as to enter upon the non-linear part of the valve's characteristics. Then the average slope of the valve will be reduced until the energy fed back is only just sufficient to replace that lost in r, and a state of equilibrium will be attained.

The valve is now said to be *oscillating*. It is producing and maintaining in L1C1 a constant current at the frequency to which this circuit is tuned, this current producing across L1C1 a voltage equal to the largest that the valve can handle without distortion.

If Cga is large enough, if r is small enough, and if the amplification afforded by the valve is great enough, this is what

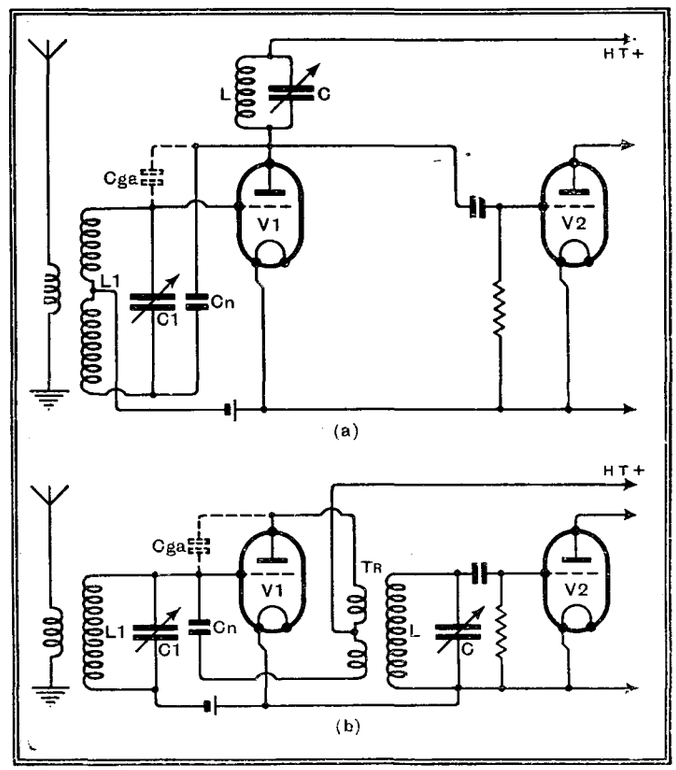

Fig. 100.—Typical neutralised circuits, in which the effect of Cga is balanced by deliberate anti-phase feedback through Cn. In (a), balance in grid-circuit; in (b), balance in anode circuit; in both cases by centre-earthed winding.

happens in the circuit of Fig. 98. With coils of fairly good design (low r) and any ordinary triode, oscillation appears every time an attempt is made to bring L1C1 and LC into resonance with the same frequency. Although theoretically there should be no tendency to oscillation when exactly tuned, it is found that the increasing loudness of signals due to the commencement of feedback as C is reduced below the value necessary for resonance, completely overwhelms the decrease of loudness that one would expect to find on

Foundations of Wireless—

distuning. In tuning the set there is therefore no aural indication of the true resonance point, so that in trying to tune for loudest signals one is led, every time, straight into the trap of oscillation, which occurs as soon as C is set a fraction low in capacity.

In a receiver, oscillation results in the production of a loud rushing noise, and in the development of sundry whistles and squeaks as the set is tuned. These are not merely supplementary to the musical programme required; they replace it. For all practical purposes, therefore, the circuit of Fig. 98 is unusable.

When the triode was the only valve available, oscillation due to feed-back through C*ga* was avoided by providing a "faked" circuit by means of which another voltage, equal in magnitude but opposite in phase to that causing oscillation, could be fed back to the grid of the valve. These arrangements, of which two typical examples are given in Fig. 100, were known as *neutralised* circuits. Owing to the fact that the AC resistance of a triode valve is low compared with the dynamic resistance of a good tuned circuit, step-up transformer couplings, as at (*b*) were the most effective and popular.

Circuits of this type have now died out entirely, the modern solution to the problem of preventing feed-back through the grid-anode capacity of the valve lying in the choice of a valve in which, by internal screening, this capacity has been reduced practically to zero.

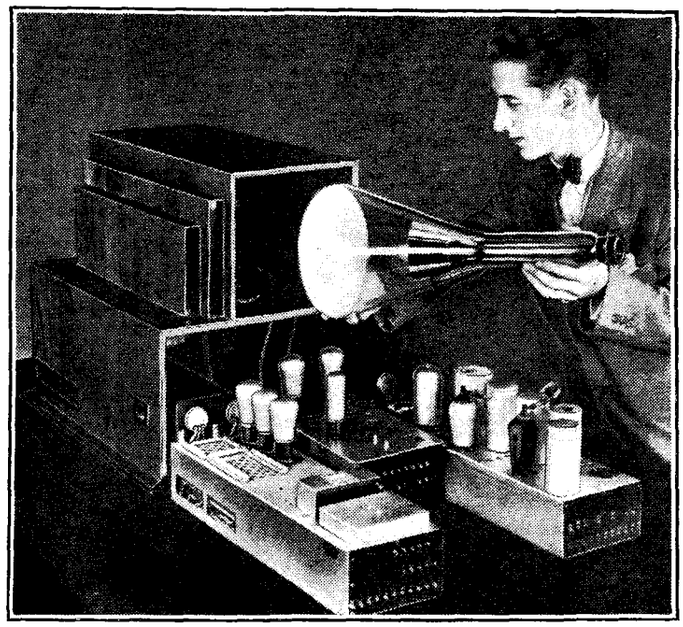

The German Loewe Cathode Ray television receiver for 180 line reception. The picture shows the receiver chassis and the tube withdrawn from the cabinet.

Random Radiations

By "DIALLIST"

France and Wireless

IT is rather curious that broadcasting has not become more popular in France than it is. The latest returns for that country show that the wireless receiving licences in force number only a little more than 1,800,000. Yet the country has plenty of stations; it may, in fact, be regarded as the cradle of broadcasting, for the Eiffel Tower was the first station in Europe, if not, indeed, in the world, to send out regular programmes of entertainment. But somehow, wireless does not seem to catch on as a hobby with the masses of the French population in the way that one would expect.

French amateur transmitters have always been renowned for their keenness, but the listener in that country is much less enthusiastic. Though valve prices are low, no less than 3 per cent. of the receiving sets in use in France are of the crystal detector type, whilst sets containing but two or three valves are much commoner in France than in this country.

Carrier Waves and Carrier Pigeons

IT is reported that an interested experiment was made recently in the south of France to discover whether carrier pigeons were affected by radiations from a transmitting aerial.

Several groups of pigeons were released from baskets placed near the foot of one of the aerial masts of a broadcasting station whilst the transmitter was in action. For the first group very small power was used, but this was gradually increased until when the last birds were set free the plant was working at its full output rating. It appears that so long as the power was low the birds behaved normally, rising, as they usually do, to a considerable height, circling once or twice, and then making a bee-line for home. But as the power was raised the birds took longer and longer to make up their minds about the right direction. Finally, when the transmitter was going all out the last group of birds was completely baffled. On being released they reached no great height, and, after flying round aimlessly a few times, they returned to the baskets.

What's the Explanation?

Unfortunately, the wavelength on which the emissions were made is not stated; we are not even told whether it was long, medium or short. If it was short the behaviour of the pigeons becomes easier to understand, for it is well known that at very short range radiations on wavelengths of 30 metres or less may have marked physical effects on animals.

Wireless for the Deaf

THE suggestion made recently that a fund should be started for providing deaf people with wireless receiving sets might at first blush seem to be almost on a par with the proposal to furnish the blind with television receivers. But actually there is nothing absurd about it. Many who are so deaf that they can take little or no part in ordinary conversation can hear the musical parts, at any rate, of wireless programmes quite well by means of headphones. Speech, though, presents much greater difficulties, for, as Mr. J. Poliakoff, of Multitone fame, has shown, many deaf people are deficient in high-frequency response. When this is so any increase in the intensity of sounds brought about by amplification leads to a masking of the high tones by the low. It is largely for this reason that even those of normal hearing often find it so difficult to get hold of numbers or proper names over the land-line telephone, particularly if the correspondent at the other end is speaking rather loudly. In his deaf-aid amplifiers Mr. Poliakoff employs the principle of unmasked hearing, a principle which would be equally applicable to wireless receiving sets intended for the deaf.

One of the telephone receivers is designed to handle a wide range of frequencies; the other will have nothing whatever to do with any but high frequencies. The volume from each earpiece can be regulated separately, and since the high frequencies are delivered to one ear only they cannot be masked by low-pitched sounds.

New Use for the Eiffel Tower

"LE Roi est mort; vive le Roi!" If the Eiffel Tower is to end its career as a long-wave broadcasting station it is shortly to embark on a brand new one as the site of the Paris high-definition television transmitter. Paris is lucky in having ready-made the ideal location for a television station. I forget the exact height of the Eiffel Tower, but so far as I can remember it is well over 900 feet, and this should ensure a very wide service area. The station is coming into operation towards the end of the summer, and it is anticipated that the new hobby will be eagerly taken up by Parisians.

One big advantage conferred by the great height of the Eiffel Tower is that it should be easy to arrange relay stations for direct pick-up of its transmissions at considerable distances from the capital.

A Point of Importance

This point will have to be borne in mind when the site of the London television station is chosen. Relaying *can* be done by means of the special high-frequency cables that have been described in *The Wireless World*, but these cables are very expensive and an enormous amount of money will be saved if the site is so selected that relaying by means of the radio link can be used to serve other important areas not covered by the London station. Like Paris, Berlin is also fortunate in this way, for the ultra-short wave signals of its television trans-

Random Radiations—

mitter are received with abnormal strength in the distant Brocken and can be re-radiated thence over a very large area.

Really Worth Hearing

THE other day I made a find. It was a gramophone record belonging to a friend and made no less than twenty-four years ago. The disc was about the size of those that you can buy at Woolworth's, but was not priced at 6d.; it cost actually half a guinea, though it was not double-sided. Eagerly desiring to hear what gramophone reproduction had been like in the days that now seem almost prehistoric in the matter of the mechanical reproduction of sound, I hunted round for a really ancient gramophone and was eventually successful in my quest. The instrument was not nearly so old as the record, though the tale of its years was considerable.

I wish you could have heard that record, "Hands Across the Sea," as played by the London Orchestra and reproduced by that ancient machine. There was absolutely no trace whatever of any bass and not very much of "top." Imagine the wheeziest and crankiest of barrel-organs heard at a distance of a couple of hundred yards on a rather windy day, and you may have some faint idea of the weird noises that issued from the elderly gramophone's gaily painted horn.

Radio in Jubilee Week

Times and Details of the Principal Broadcasts

Sunday, May 5th.

10.0 a.m.: Military Service in York Minster.

5.30 p.m.: "Henry V" (Shakespeare).

7.55 p.m.: Special Service in preparation for the King's Jubilee, to be held in the Concert Hall, Broadcasting House.

9.20 p.m.: Concert (under direction of Sir Henry Wood) of Works by British Composers as first performed at Promenade Concerts during the past 25 years.

Monday, May 6th.

11.5 a.m.: Commentary on the Procession to St. Paul's.

11.30 a.m.—12.30 p.m.: Service relayed from St. Paul's.

6.30 p.m.: Special Jubilee Programme.

8.0 p.m.: The King's Speech.

8.10 p.m.—9.0 p.m.: All-Star Variety relayed from the New Corn Exchange, Brighton.

10.15 p.m.: The Poet Laureate.

11.30 p.m.—1 a.m.: Dance Music from Brighton.

Tuesday, May 7th.

8.0 p.m.: Play: "The Trial of William Penn."

8.10 p.m.: "La Cerentola" (Rossini) relayed in its entirety from Covent Garden.

Wednesday, May 8th.

2.55 p.m.: Running Commentary on the Chester Cup.

7.30 p.m.: Musical Comedy: "The Desert Song" (Romberg).

Thursday, May 9th.

11.20—11.50 a.m.: Lords and Commons present Loyal Address to the King: relayed from Westminster Hall.

7.45 p.m.: "From the London Theatre."

10 p.m.: "Siegfried" (Wagner) Act III relayed from Covent Garden.

Friday, May 10th.

8.30 p.m.: London Musical Festival Concert, No. 1, directed by Adrian Boult.

8.30 p.m.: Songs from the Shows: "Royal Box."

Saturday, May 11th.

8 p.m.: Special "Music Hall" (1½ hours).

Sunday, May 12th.

10.45 a.m.—11.45 a.m.: Jubilee Thanksgiving Service relayed from St. George's Chapel, Windsor.

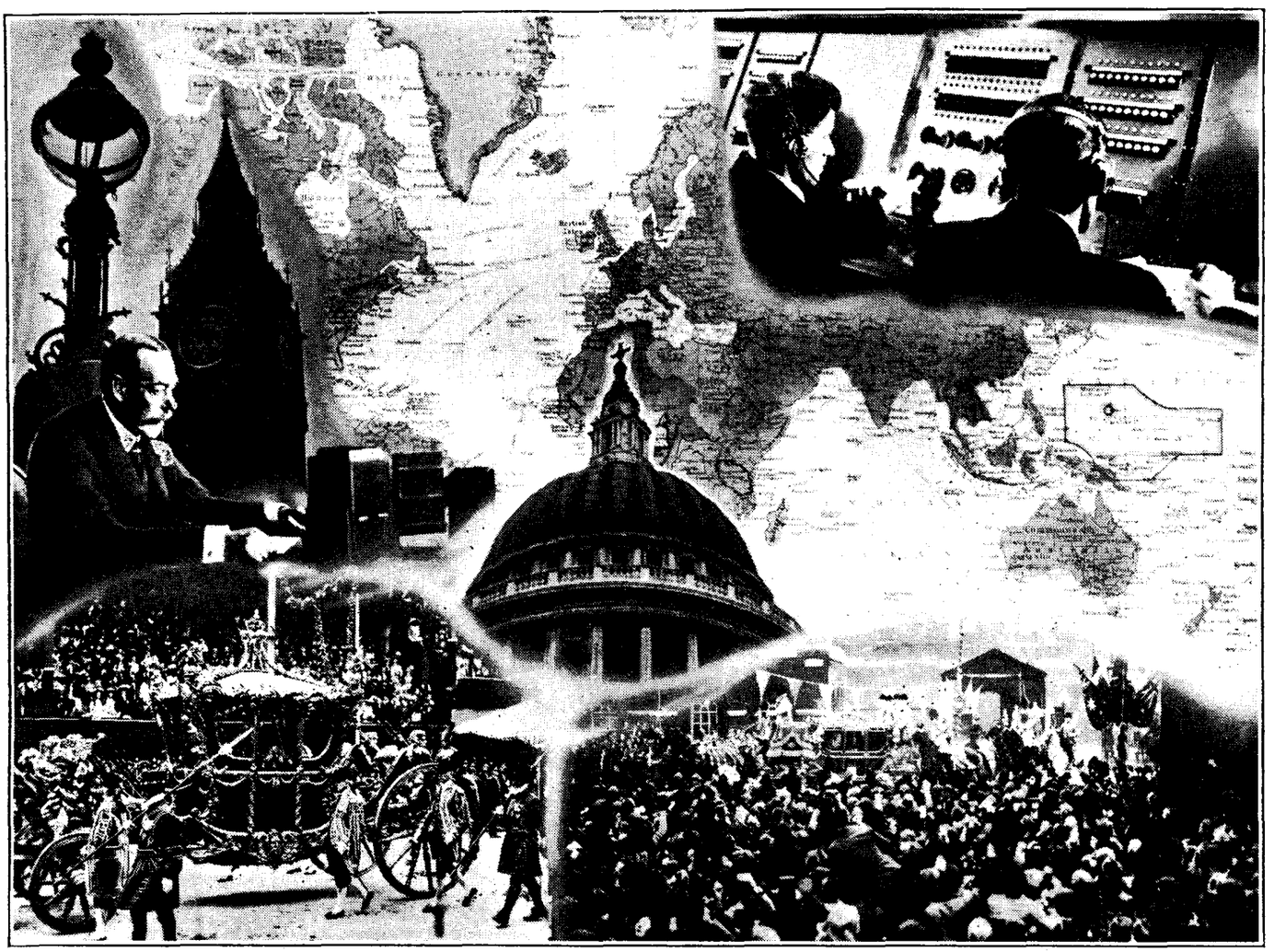

RADIO PAGEANTRY OF JUBILEE WEEK. Something of the brilliance of the Jubilee broadcasts is caught in this composite illustration, which shows how the world will participate in the thanksgiving celebrations on Accession Day, May 6th. The King's speech will be heard at 8 p.m.

Letters to the Editor

The Editor does not hold himself responsible for the opinions of his correspondents

Loud Speaker Response Curve

WITH reference to the loud speaker response curves published in your issue of March 29th, I think you are to be congratulated on your results, and you have undoubtedly set a new standard of comparison in a product which has always been rather difficult to assess.

I have heard at least six of the speakers reported on, and I should have no hesitation in stating that your curves do actually convey a picture of the performance of each speaker.

There is, however, one direction in which some of your readers may be misled. I refer to "knocking" or "rattling" of the cone which may be caused by a pure note of low frequency at large volume, as you have not made it clear that the speaker will handle much bigger input of speech or music. A speaker which "knocks" at 70 cycles with 4 watts input might easily handle 8 watts from radio or gramophone without distress, and the user is eventually interested in the normal capacity of the speaker.

A pure note at 70 or 80 cycles is never attained in ordinary use. The only near approach is a sustained low note on the organ, and even this is rich in harmonics, and has not the same effect on the speaker.

I should like to suggest that speakers up to about £3 might be tested at 2 watts from the oscillator and 4 watts music, whilst speakers over £3 in price might be tested at double these rates. An expensive speaker is obviously more generously designed and should be expected to handle a larger input.

I notice that some people still object to response curves of speakers because there may be certain faults which the curve does not expose. I cannot see the force of this objection, as the only claim made for the curve is that it indicates the range and general response of the speaker. One might as well object to publishing an illustration of a motor car because it does not prove what the engine will do, or to the illustration of a suit because it does not show the lining.

G. A. BRIGGS,
Wharfedale Wireless Works.
Bradford.

YOUR efforts to provide the public and the trade with sound information with regard to present-day loud speakers will meet with nothing but appreciation, but we, as loud speaker manufacturers with a large fund of experience to draw upon, have felt hitherto that the publication of such curves without a perfectly clear indication of their limitations and the extent of their failure to indicate the whole of the data necessary to the full appreciation of the performance of a loud speaker would tend to mislead the prospective loud speaker user, and we have, in consequence, set our faces definitely against publication of such curves.

There is more than one method of making a response curve of a loud speaker, and we habitually submit our loud speaker models to independent authorities in order that they can make curves for our information and comparison with the curves made in our own laboratory. These curves are of the greatest value to us in designing, but the value can only be obtained by the comparison of one curve with another, or more, by experts with a full knowledge of the conditions under which they have been made. The curves almost invariably differ very largely in appearance.

We have studied the method adopted by you in making response curves for the purpose of your review and are glad to note that you have made it clear that the curve alone does not tell the whole story, and, in particular, that you have drawn attention to the fact that the response curve gives no indication of the capability of the loud speaker to reproduce transients. This feature, we feel, should have been even more strongly emphasised in the article describing your methods and in the reviews of individual loud speakers, as we know by experience the large part that it plays in achieving really faithful reproduction.

The limitation of the response curves having been made quite clear, we have decided to break our rule and to allow you to publish the response curves of our loud speakers if you desire to do so. We suggest, however, that at the beginning of each series of reviews a short preface should be inserted giving the limitations of the curves, and that in the review of the actual loud speaker the other characteristics should be somewhat more fully discussed.

The British Blue Spot Co., Ltd.
London.

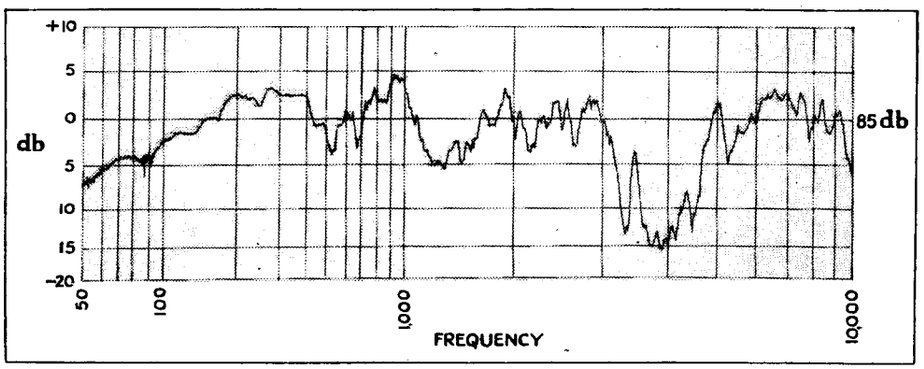

Axial response curve of the Blue Spot Dual loud speaker taken during the *Wireless World* preliminary tests.

Television Research

THE Editorial on Television Research (*The Wireless World*, March 29th) draws attention to a serious situation if, as implied, the E.M.I.-Marconi Company and the Baird Company are unwilling to disclose to interested persons the nature of the signals which will be employed for television broadcasting. However, paragraph 42, sections (*a*) and (*d*) of the Report of the Television Committee states that, amongst other things, the Advisory Committee should advise on:

"(*a*) The performance specification for the two sets of apparatus . . ." (i.e., the transmitting apparatus to be provided by the two companies).

"(*d*) The establishment of the essential technical data governing all television transmissions, such as the number of lines per picture, the number of pictures transmitted per second, and the nature of the synchronising signals."

Surely, then, the solution of the problem is for the Advisory Committee to *publish* a specification, including "the essential technical data," to which the transmitting apparatus will be required to conform. This would provide the information required by manufacturers of receiving apparatus, without disclosing the constructional details of individual systems which may legitimately be regarded as the property of the companies concerned. Since the Advisory Committee will doubtless have access to the unpublished Appendix IV of the Report, "Description of Television Systems Examined in Great Britain," there should be no difficulty in preparing a specification which will be acceptable to the transmitting companies.

D. A. BELL.

Free Grid

IT is noticed that your contributor "Free Grid" states that he is "sorry for people who have thrown their good wireless sets away in favour of a wretched relay service." We take this opportunity of correcting "Free Grid" in this matter, and it will be as well for him to be better informed on this subject.

A well-arranged relay network is capable of handling a frequency range of 50 to 5,000 cycles, whch is considerably better than the average good wireless set (*sic*)! In England, according to statistics at December 31st, 1934, some 200,000 listeners have availed themselves of "this wretched service," and thousands are finding the advantages of relay every week.

It is regrettable that such an authoritative journal as *The Wireless World* (advertising itself as "Covering every Wireless Interest") should print remarks calculated to influence public opinion, which are in no way justified.

For and on behalf of
BRITISH RELAY WIRELESS, LTD.
L. F. ODELL, Chief Engineer.

["Free Grid," in his comments, was discussing high-definition television, and the sentence quoted above should, therefore, not be dissociated from its context. The paragraph, it will be remembered, went on to say "Television programmes cannot well be distributed from house to house by wire without an enormous expense for special cables. Even then the unfortunate looker would merely get rid of the short-wave receiver, and would still need some form of cathode-ray tube or other scanning apparatus in his house. So he might just as well have a complete television set."—ED.]

HINTS and TIPS

Practical Aids to Better Reception

THE method of short-circuiting components in sequence and in accordance with a definite plan is often advocated as an aid to the rapid location of faulty sections in a receiver; it can also be used to locate a stage or section causing crackling, hum, or other noises, and is very successful when applied in the literal and obvious way to a home-constructed set or to one where access to components is easy and when a circuit diagram is available.

Short-circuiting with Safety

But it sometimes happens that the receiver under test is unconventional, both with regard to circuit and layout, and, moreover, a circuit diagram is often lacking. In such cases the task is anything but easy, and, worse still, a short-circuit applied in the wrong place may be disastrous. The purpose of this paragraph is to suggest a method of applying what amounts to a short-circuit without any risk of doing damage in the event of a mistake. All that is needed is a fixed condenser of about 4 mfds. of adequate working voltage, say, 250 V or 300 V; if these figures relate to AC working, no fears need be entertained when dealing with the average commercial receiver. Two insulated test leads, each provided with a crocodile clip, are connected to the condenser terminals.

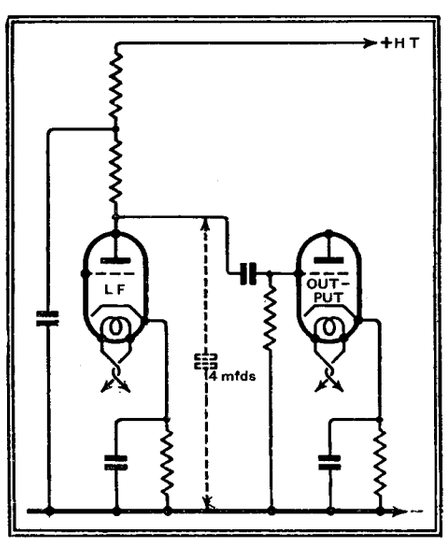

Fig. 1.—A large condenser, connected as shown in dotted lines, acts as a virtual short-circuit so far as signal voltages are concerned, but does not affect the DC circuits, even if the test is wrongly made.

Tests may be made most easily and rapidly by clipping one lead to the chassis or earth terminal and joining the other in turn to each anode, starting with the output valve and working backwards towards the input end of the set; a point will eventually be reached at which connection of the clip stops the noise, but its application to an earlier stage has no effect. The faulty stage has now been found.

Having thus narrowed down the field of search, further and more detailed tests of the components in the faulty section can, in many cases, be made by the same method still without risk of damage. More conventional appliances can, if necessary, be used to complete the diagnosis, but a lot of time will have been saved by the preliminary test. If desired, the condenser can be discharged between tests by flicking the testing lead on to the chassis.

WIRE-WOUND and composition resistances tend to become more alike in external appearance. Electrically speaking, the main difference between these resistances is that the first are almost certain to be more or less inductive, while the latter are non-inductive. From a practical point of view, this may be a matter of some importance when the resistor is built into a receiver. It is fairly well known that, although in most cases the presence of a certain amount of inductance is harmless, in others it is to be avoided at all costs. In general, inductive resistances are particularly undesirable for "anti-parasitic" purposes and for decoupling the screening grid feed circuits of HF valves. Any appreciable inductance associated with a condenser (or stray capacity) implies a risk of introducing an unwanted, and possibly harmful, tuned circuit which will tend to modify the behaviour of the set.

Resistances—Inductive and Non-inductive

A good example of the care which is often necessary in selecting components is to be found in the series resistance in reaction circuits, frequently advocated as a cure for erratic reaction control on long waves. The position of this resistance, which usually has a value of 500 ohms or so, is indicated in Fig. 2. In a recent case where a wire-wound resistor was inadvertently used for this purpose some very puzzling and seemingly unaccountable effects were observed, the most characteristic being that reaction became uncontrollable at the lower wavelengths.

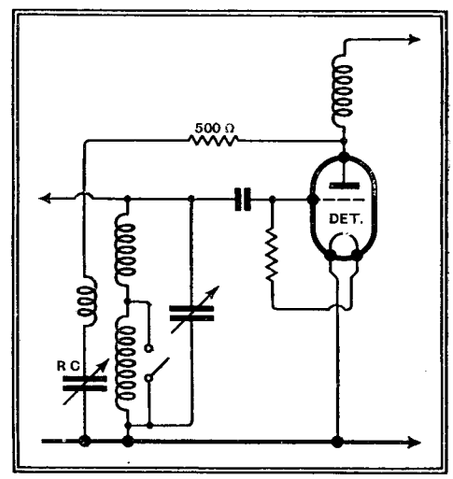

Fig. 2.—The 500-ohm anti-parasitic resistance sometimes necessary for stabilising reaction circuits should be non-inductive.

AMONGST THE SHORT WAVES

By J. GODCHAUX ABRAHAMS

ANY listener on short waves to-day must notice to what extent the number of transmissions heard now emanate from Central and South American cities. If, during the evening, you carry out a search for transatlantic broadcasts, barring a few announcements in the English language which stamp the transmission as of U.S.A. origin, most of the speech now heard would appear to be either in the Portuguese or Spanish languages.

Conditions, generally, during the past month or so have been favourable to the capture of radio entertainments from long distances, but it has been a remarkable fact that, on an average, the strongest signals logged have been those transmitted by comparatively small stations in Venezuela, Colombia and other neighbouring South American countries.

In view of the interest taken in new "loggings," the following table may prove of use to British short-wave listeners; it comprises mostly details collected either from personal experience or gathered from reports received from equally enthusiastic fans.

In a subsequent issue I hope to publish useful details of stations now working in Central America and the numerous islands which abound in the West Indies, and from which, under favourable conditions, broadcasts are occasionally picked up in Great Britain.

In Mexico, so far, we find only three

Amongst the Short Waves—

short-wave stations, of which two already figure in many logs. XETE, operated by the Ericcson Telephone Company (P.O. Box 1,396) in Mexico City, on 31.25 metres (9,600 kc/s), is a regular transmitter; XEBT, in the same city, owned by a private company, El Buen Tono S.A., works on 49.92 metres (6,010 kc/s), and usually relays programmes from the medium-wave station XEB. As a distinctive signal between items it uses a siren followed by three cuckoo calls. Finally, a new station, XECW, with the slogan El Caballero Santokun, now transmits programmes on 50.17 metres (5,980 kc/s). Reports should be sent to Calle del Bajio 120, Mexico City.

In view of the increased power of the better-known stations such as those already existing at Boundbrook, Wayne, Schenectady, Mason, Millis, and so on, in the United States, and the greater ease with which their radio entertainments may be tuned in during both day and night hours, there is less thrill attached to listening to them, and for the more fastidious a search for the more distant and weaker stations in South America may be recommended—good hunting!

ACTIVE SHORT-WAVE STATIONS IN SOUTH AMERICA

Call and Station.	Metres.	Kc/s.	
ARGENTINA.			
LSX Monte Grande (Transradio Internacional San Martin 329, Buenos Aires).	28.98	10,350	Relays programmes from Radio Splendid (LR4).
LU1DA/LU8AB Buenos Aires (Felix Gunther, Paseo Colon 470, Buenos Aires).	47.2	6,355	—
BOLIVIA.			
CP5 La Paz	19.6	15,310	Radio Illimani (day wave).
CP5 La Paz (M. Lopez Videla, Compania Radio Boliviana, 637, Castilla, La Paz, Bolivia).	49.34	6,080	Radio Illimani (night wave). Relays CP4, La Paz (288.5 m. 1,040 kcs.).
BRAZIL.			
PSH Marapicu	19.35	10,220	La Voz do Brasil, Time Signal G.M.T. 00.00 (bells).
PRF5 Rio de Janeiro (Short Wave Station PRF5, Caixa Postal 709, Rio de Janeiro).	31.58	9,501	La Voz do Brasil (In English: Short Wave Station of the Government of Brazil. Interval Signal 3-note gong. Closes with Brazilian National Anthem.
PRA8 Pernambuco (Radio Club de Pernambuco, Avenida Cruz Cabuga 394, Recife, Brazil).	49.5	6,060	A Voz do Norte. (Interval Signal: Siren, fade in and out.
CHILE.			
CE32 Los Andes (Ladislao Larrain, Calle Hermanos Clark, Los Andes, Aconcagua).	32.0	9,375	—
CE3AG Santiago (Luis M. Desmares, Casilla 761, Santiago).	44.0	6,818	—
COLOMBIA.			
HJ5ABE Cali	21.42	14,000	—
HJ5ABH Palmira	31.61	9,490	—
HJ5ABF Popayan	36.59	8,200	—
HJ3ABD Bogotá (Alford's Radio Service, Box 509).	40.55	7,400	Colombia Broadcasting.
HJ4ABB Manizales (Roberto V. Baena, Box 175).	42.0	7,140	La Voz de Caldas.
HKE Bogotá (National Observatory of San Bartolomé).	42.25	7,100	—
HJ5ABB Cali	42.67	7,030	—
HJ5ABG Cali (Antonio J. Restrepo, Box 200).	42.86	7,000	—
HJ4ABF Medellin	45.45	6,600	—
HJ5ABD Cali (Miguel Rivas).	46.15	6,500	La Voz del Valle. Interval Signal: 3 gong notes.
HJ1ABB Barranquilla (Elias J. Pellet, Box 715).	46.50	6,450	Interval Signal: 4 bells.
HJ1ABH Cienaga	47.62	6,300	La Voz de Cienaga.
HJ4ABC Pereira	48.0	6,250	La Voz de Pereira.
HJ3ABF Bogotá (Manoel Jose Uribe y Cia, Box 317).	48.58	7,175	Interval Signal: Chimes similar to N.B.C. (U.S.A.).
HJ2ABA Tunja	48.78	6,150	Ecos de Boyaca.
HJ4ABN Manizales (Box 50.)	49.02	6,120	—
HJ4ABG Medellin	49.1	6,110	—
HJ4ABL Manizales	49.18	6,100	Ecos del Occidente. Interval Signal: Blasts on a motor horn.
HJ1ABC Quibo	49.18	6,100	—
HJ1ABE Cartagena (Antonio L. Fuentes, Box 31).	49.18	6,100	La Voz de los Laboratorios Fuentes.
HJ1ABD Cartagena (Franco Cove y Cia, Box 252).	49.2	6,097	Ondas de la Heroica.
HJN Bogotá	49.34	6,080	Radiodifusora Nacional.
HJ1ABF Barranquilla	49.42	6,070	—
HJ4ABD Medellin (See HJ3ABD).	49.5	6,060	—
HJ1ABG Barranquilla (P.O. Box 445.)	49.65	6,042	Emisora Atlantico: 4 chimes every 15 mins.
HJ4ABI Medellin	49.75	6,030	—
HJ3ABH Bogotá (Box 565.)	49.96	6,005	La Voz de la Victor.
HJ2ABC Cucuta (P. C. Sanchez, Cucuta.)	50.2	5,976	La Voz de Cucuta.
HJ1ABJ Santa Marta	50.51	5,940	(Irregular).
HJ4ABE Medellin	50.59	5,928	Cia Radiodifusora de Medellin.
HJ5ABC Cali (R. Angulo.)	58.82	5,100	La Voz de Colombia.
ECUADOR.			
HCJB Quito (Mision Evanjelica.)	37.0	8,108.1	Interval Signal: 2-tone chime.
HC1JW Quito (Victoriano Salvador, Box 137.)	44.05	6,810	—
HC2RL Guayaquil (Station at Quinta Piedad), Dr. Roberto Levi, Box 759.	45.00	6,667	Opens and closes with Ecuadorian National Anthem.
HC1FG Riobamba	45.31	6,620	Aqui Estacion el Prado, Riobamba.
HC1MAR Ambato	46.99	6,386	—
HCJB Quito	56 (See 37 m.)	5,357.1	—
HC2OC Quito	65.0	4,615.3	—
HC2ET Guayaquil	65.22	4,600	—
HC2JSB Guayaquil	70	4,286	—
HCJB Quito	73 (See 37 m.)	4,110	—
PARAGUAY.			
ZP10 Asuncion (Julio L. Rodriguez, Banco el Hogar Argentino, Asuncion, Paraguay.)	36.02	8,334	—
VENEZUELA.			
YVQ Maracay	44.96	6,672	Government Station.
YV6RV Valencia	46.10	6,508	S.B. on 675 kcs. (444.4 m.). La Voz de Carabobo. Interval Signal: 5 notes (chimes).
YV4RC Caracas (Sociedad Anonima de Radio.)	47.05	6,375	—
YV3RC Caracas (Hermann Degwitz, Pasaje Ramella, Caracas.)	48.78	6,150	Radiodifusora Venezolana. Interval Signal: 4 notes on gongs. Opens with fanfare of trumpets and peal of bells.
YV2RC Caracas (Cia Anonima Venezolana, Box 2.009.)	49.08	6,112	S.B. on 312.3 m. (960 kcs.). YV1RC. Interval Signal: 4 bells.
YV14RC Caracas (Adolfo Amitesarove.)	49.2	6,094	—
YV5RMO Maracaibo (Santiago M. Vegas, Box 214.)	51.28	5,850	Lady Announcer. Ecos de Caribe. Interval Signal: 1 stroke on gong followed by short run of notes. Programme opens and closes with Blue Danube Waltz.

The Wireless World
THE PRACTICAL RADIO JOURNAL
25th Year of Publication

No. 816. FRIDAY, APRIL 19TH, 1935. VOL. XXXVI. No. 16.

Proprietors : ILIFFE & SONS LTD.

Editor :
HUGH S. POCOCK.

Editorial,
Advertising and Publishing Offices :
DORSET HOUSE, STAMFORD STREET,
LONDON, S.E.1.

Telephone: Hop. 3333 (50 lines).
Telegrams: "Ethaworld, Watloo, London."

COVENTRY : Hertford Street.
Telegrams: "Autocar, Coventry." Telephone: 5210 Coventry.

BIRMINGHAM :
Guildhall Buildings, Navigation Street, 2.
Telegrams: "Autopress, Birmingham." Telephone: 2971 Midland (4 lines).

MANCHESTER : 260, Deansgate, 3.
Telegrams: "Iliffe, Manchester." Telephone: Blackfriars 4412 (4 lines).

GLASGOW : 26B, Renfield Street, C.2.
Telegrams: "Iliffe, Glasgow." Telephone: Central 4857.

PUBLISHED WEEKLY. ENTERED AS SECOND CLASS MATTER AT NEW YORK, N.Y.

Subscription Rates :
Home, £1 1s. 8d. ; Canada, £1 1s. 8d. ; other countries, £1 3s. 10d. per annum.

As many of the circuits and apparatus described in these pages are covered by patents, readers are advised, before making use of them, to satisfy themselves that they would not be infringing patents.

CONTENTS

	Page
Editorial Comment	381
AC Short-wave Converter	382
B.B.C.'s Flying Squad	386
Heart Testing by Cathode Ray	388
Radio Data Charts—II	390
Unbiased	392
New All-metal Valves	393
Practical Hints and Tips	394
Current Topics	395
Wave Distortion in Receivers—II	396
Listeners' Guide for the Week	398
Murphy A26 Reviewed	400
Car Radio Performance	403
New Apparatus Reviewed	404
Broadcast Brevities	405
Readers' Problems	406

EDITORIAL COMMENT

Ultra-Short Waves

Facilities for Experiment Needed

SEVERAL correspondents have written to us suggesting that the B.B.C. might perform a useful service to those who are experimenting with the development of ultra-short wave receivers for television requirements if they would activate a transmitter for some regular telephony on these wavelengths.

The B.B.C. has, it is understood, a short-wave transmitter on the roof of Broadcasting House already available, and a most useful temporary service could be inaugurated with, it may be presumed, very little expense.

Such a service would not, of course, remove the obligation we feel exists, which was the subject of a Leader in our issue of March 29th, that all those working on television should have equal facilities for their research work.

The longer the B.B.C. service of high definition is delayed the more unfair is this situation where only two concerns operate transmitters and are aware of the nature of the transmissions and the working times.

It might, of course, be argued that anyone interested in ultra-short wave receivers for commercial sound and television reception should be prepared to put up a transmitter for which they could obtain an experimental licence from the Post Office, but this seems to be a needless expense, for the value of the station would be of comparatively short duration, as reception of the B.B.C. transmissions would, at a later date, remove the necessity for such private stations. Again, in the case of the two companies to which we have already referred, their expenditure on transmitters is productive seeing that the Television Committee has recommended that they, or their associated companies, should supply to the B.B.C. the transmitters for the permanent service.

There is no doubt that if experimental transmissions of ultra-short wave broadcasting, even if confined to sound at first, could be made available at once, it would assist greatly in the development of suitable apparatus wherewith to receive the B.B.C. service when it is inaugurated and would be valued by the industry as a whole and by a vast number of experimenters.

Wireless and Electricity Supply

A YEAR or two ago it was a comparatively common thing to meet with cases where local electricity supply authorities raised objections to wireless sets being connected to the power meter and tried to insist on all sets being run from a lighting circuit and paying in consequence a higher rate for the current consumed, although a lighting rate is intended only for illumination.

The idea that wireless sets ought to be connected to the lighting supply probably arose at a time when valves gave an appreciable light when working. We should have thought that by now the position was sufficiently well understood for supply companies to have long since desisted from trying to exact the lighting rate for wireless. But we are mistaken, for only recently we hear that the Bexley Urban District Council in Kent has issued a notice to consumers "that it is illegal for you to obtain electricity for wireless purposes at the heating rate of charge."

Surely local supply authorities could consult some competent body, such as the Electricity Commissioners, before taking such action. Let us hope they will do so in this case and withdraw this ill-advised notice to consumers.

AC Short-wave Converter

By

H. B. DENT

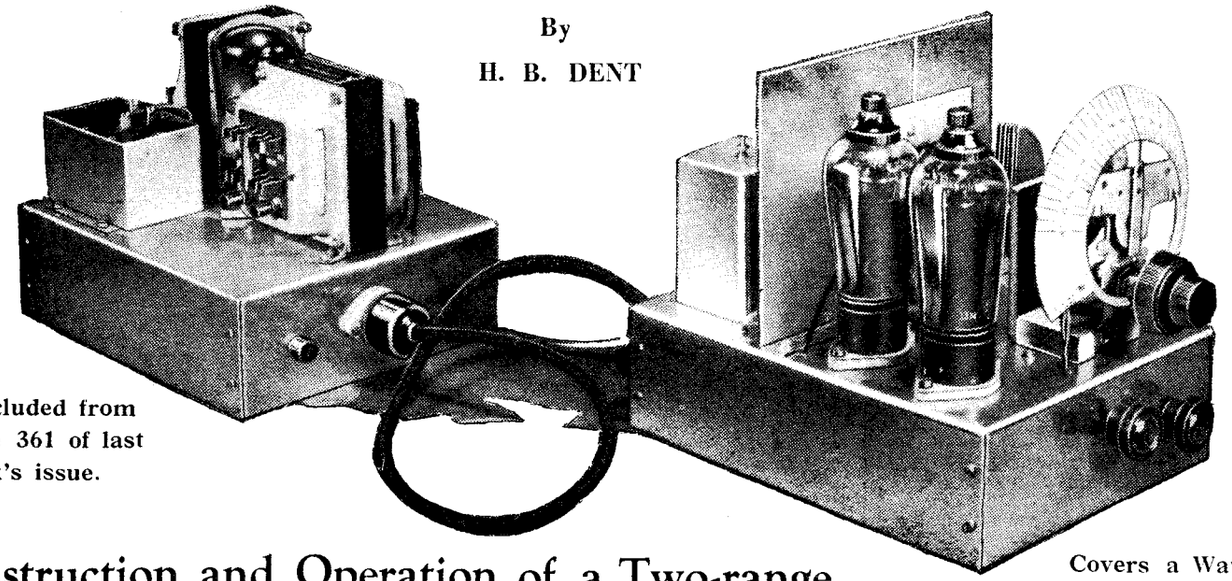

Concluded from page 361 of last week's issue.

Covers a Waveband of 13.5 to 50 metres

Construction and Operation of a Two-range Superheterodyne Unit

THIS article completes the description of a unit which should make a strong appeal to anyone interested in short-wave reception because of its simplicity and a remarkably good performance, due to the inclusion of new and important features. In the following pages the construction and operation of the short-wave converter is described with full details of the coils and other special parts.

THE converter and its power supply unit are assembled on separate metal chassis which from the dimensional drawings will be seen are identical in size. They are made from No. 18 SWG sheet aluminium, and all the components are fixed in position with 4BA or 6BA screws as the occasion demands. The construction of the power pack is quite straightforward and will not be dealt with in detail as the drawings and illustrations are self-explanatory. For the converter unit, however, a few special items are needed; these include the coils, two brackets, one for the main tuning condenser and one for the aerial trimming condenser C2, also a two-part screen made from the same gauge aluminium as the chassis.

The aerial coils are wound on two separate formers, each consisting of a 2in. length of Becol No. 3 six-wing coil former, 1in. in diameter overall. These are mounted on a block of wood 3in. × $1\frac{3}{16}$in. × $\frac{1}{2}$in., and the complete unit fixed to the vertical aluminium screen by a $\frac{3}{4}$in. No. 6BA screw and nut.

The top former of the assembly carries the range one, that is to say, the shorter waveband, coil which actually consists of two separate windings L2 and L3 joined in series for this range by the single-pole switches S1 and S2. Each has exactly $4\frac{1}{2}$ turns of No. 18 SWG tinned copper wire, the turns being spaced $\frac{1}{8}$in. apart. Both coils are wound in the same direction, and the start and finish of each is passed through a hole in one of the wings and a short length, about $\frac{1}{2}$in. extension, left as a connecting lug. Incidentally, the terminal points of these coils are all on different wings, for in order to avoid a gap between adjacent turns the beginning of the second $4\frac{1}{2}$ turns starts from the adjacent wing to that at which the first section terminates. This advances the end of the coil L3 one wing beyond the beginning of coil L2. This can be followed from the drawings.

For the aerial coupling $3\frac{1}{2}$ turns of No. 34 DSC, or any fine gauge wire available, are wound in the spaces between the turns on coils L2 and L3, this winding being equally disposed about the centre and giving equal coupling to both coils.

Coil L4, which is brought into circuit on range two, consists of eighteen turns of No. 20 DCC wound in two equal parts so that the centre tapping can be made by looping the finish of one half and the start of the other through a hole in a wing. Each half of nine turns is wound to occupy $\frac{7}{16}$in., and the space between the two windings is $\frac{1}{8}$in.

The finish of coil L2, nearest the wood block, is joined to the beginning, also the wood block end, of L4, whilst the termination of this coil is in turn joined to the start of L3. Therefore, the adjacent centre ends of L2 and L3 join respectively to the two ends of L4. The interconnection of these coils should be made so that they agree with the theoretical conception as shown in the circuit diagram in Fig. 1.

Oscillator Coil

The oscillator coil is comparatively straightforward, as both range 1 and range 2 coils are wound on a 3in. length of No. 3 Becol former. L6 has nine turns, spaced $\frac{1}{8}$in., of No. 20 SWG tinned copper wire, and L5, seventeen turns of No. 20 DCC. One half-inch separates the two, and L5 is wound to occupy a shade over $\frac{7}{8}$in. This means that the turns are very slightly spaced. The inductance will be the same if DSC wire with greater spacing between turns is used. Each of these

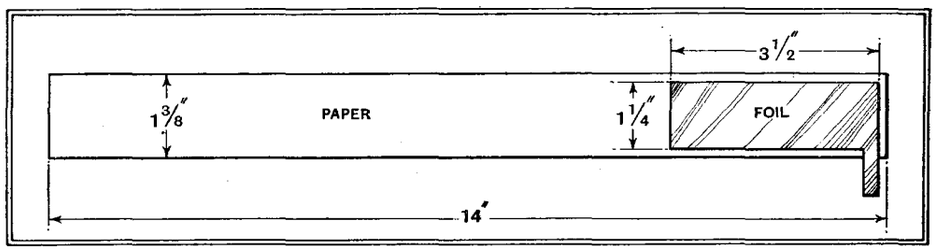

If the copper foil used to screen the primary winding on the HF output transformer is glued to a long strip of paper as shown, the overlapping ends will be adequately insulated.

AC Short-wave Converter—

windings is separately terminated as the padding condenser C8 is joined between them.

The output HF transformer is wound on a 2in. length of 1in. diameter Paxolin tube. The primary is put on first and has 110 turns of No. 34 DSC with a tapping made by passing the 55th turn through a hole in the former and soldering it to one of the top lugs, these being fashioned by looping a turn of No. 20 SWG wire through a hole and twisting the ends together. Over this is wound three layers of medium thickness drawing paper, the width of the strip being slightly greater than the winding length. Now follows the electrostatic screen consisting of a strip of thin copper, or aluminium, foil just long enough to encircle the coil and overlap by about ⅛in., but the overlapping ends must not touch or contact with each other, thus forming a complete metallic sheath.

The best way to guard against this is to cut another strip of paper the same width as the first, but long enough to make four lappings of the former. Now cut the foil slightly narrower and glue one end to the paper ½in. from the edge. Allow to dry before proceeding further.

Incidentally, the screen must be earthed, and this is accomplished by leaving a short lug protruding at the side that falls nearest the base of the coil and at the end of the foil strip stuck to the paper. Now smear a little gum on the paper strip, on the ½in. overlap, and wind round the coil with the foil on the inside, first positioning the lug on the foil so that it coincides with the hole in the Paxolin former that takes the small 6BA screw holding the bent fixing bracket. When the coil is assembled on the chassis the electrostatic screen will be automatically earthed by the coil mounting.

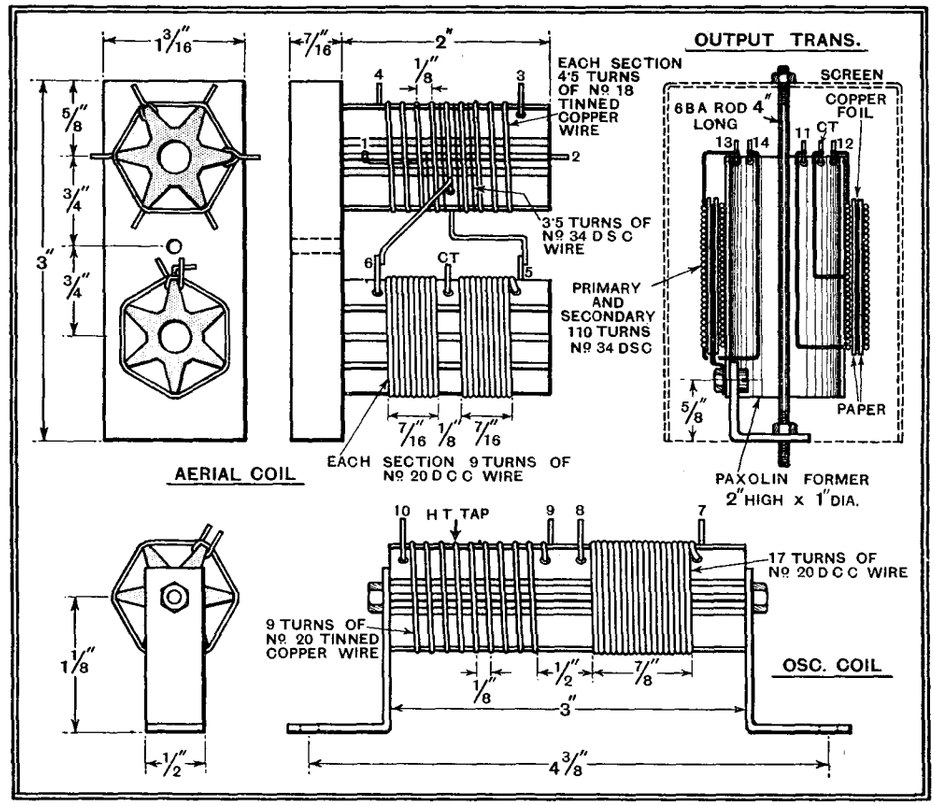

Constructional details of the coils ; these comprise a dual-range aerial coil, an oscillator coil and a screened primary HF output transformer.

When placing on the foil and its paper backing it will be found that the paper strip is interposed between the overlap of the foil, so effectively insulating it. Finally fix by a little glue.

When dry the secondary winding, consisting of 110 turns of No. 34 DSC, as for the primary, is put on; the start and finish can pass through holes in the former and then join to the top tags, but the winding had best be fixed in position with a little adhesive smeared on the last turn at each end so that it is glued to the paper below.

The remainder of the constructional work is largely straightforward for it comprises making two aluminium chassis to the specification in the drawings and the two small brackets. The chassis can be obtained with all holes drilled, and no doubt by the time this appears in print the coils also will be available, but the full constructional details are given for the benefit of readers desiring to make their own.

No particular sequence need be followed in assembling the parts on the chassis as practically all the fixing holes are

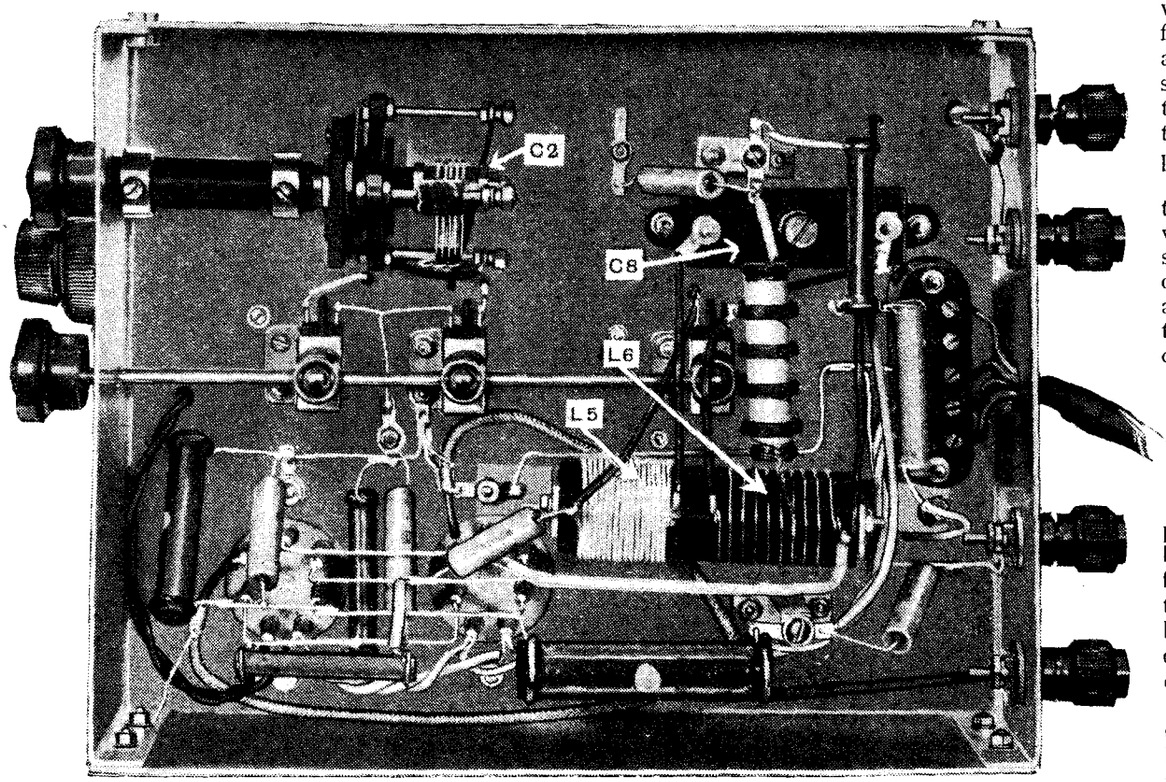

The position of the oscillator coil, padding condenser. C8 and aerial trimming condenser C2 can be seen on this underside view of the converter chassis.

AC Short-wave Converter—

accessible. In a few cases a fixing screw serves for two purposes, for example, the right-hand 4BA screw in the rearmost of the two valve holders on the converter chassis passes through the bracket on the oscillator coil below the chassis, but the back bracket of this coil is held in position by a 6BA screw and nut.

The front screw holding down the preset condenser C8 for padding on range two is obscured by the oscillator trimming condenser C4, so that the former should be assembled first.

It would be advisable to attach the cable to the five-way connector before fixing the block to the chassis, as this operation may be found a little awkward if left until the last.

The 15 mmfd. trimming condenser, C2, is insulated from the chassis by mounting it on a piece of thin ebonite, though Paxolin would serve as well, fitted with a bent metal bracket for fixing to the chassis. As the bracket is mounted with the fixing holes underneath the condenser it should be screwed in position before the condenser is assembled. It could not be mounted on the front side of the chassis for both moving and fixed vanes are at high HF potential, for although an insulated bush could be used hard capacity would affect the tuning. So a 1¾in. ebonite extension rod is interposed, one of the Eddystone 3in. rods being cut to the length required, the brass collar removed from the waste piece and refitted on the end of the 1¾in. piece. This is attached to the spindle when assembling the condenser on its bracket.

Another insulated bracket is required for the two-gang condenser on the top of the chassis, as in this case both moving and fixed vanes of each section are at high HF potential. The oscillator tuning condenser, which is the rear section, cannot have either its stator or rotor earthed as a Hartley circuit is employed, whilst the same applies to the front section, since it tunes the input circuit of a pair of push-pull valves. The special Cyldon model used has a small metal partition insulated from either section, and this is attached by 6BA nuts and bolts to the two half-sections of the vertical screen. A front support is provided by an insulated bracket, details of which are given in the drawings.

The wooden block to which this small ebonite panel is screwed has a shallow recess cut out of the front to take the foot of the positioning lug on the Polar dial. There is no means of rigidly fixing this dial other than by its bent metal extension lug, which in a more orthodox assemblage would be bolted to the chassis of a gang condenser. To secure it therefore in the present case, a piece of brass is cut and shaped as shown in the drawings of the bracket.

The dial is not joined direct to the condenser shaft but insulated therefrom by a Cyldon flexible coupler, one side of which has a ¼in. hole to take a short length of brass rod to link up the dial, whilst the other side has a $\frac{3}{16}$in. hole to match the condenser spindle.

Before commencing the wiring a little time should be devoted to studying carefully the illustrations, wiring plan, and theoretical diagram. It is sometimes very helpful to gum a slip of paper on each component with its key lettering coinciding with the circuit diagram as the latter can then be used as a reference when actually wiring the converter and mistakes thereby avoided. The practical plan and the illustrations show the run of the wiring, and this should be followed as far as possible.

When connecting up the unit to a broadcast set the converter output positive terminal is joined to the aerial socket, or terminal, on the set and that marked negative to the earth terminal. The earth lead can be left attached to the set or transferred to the converter. It may be found that the "live" lead, that joining to the aerial terminal, requires screening to prevent the short-wave oscillator voltages being conveyed to the broadcast set by

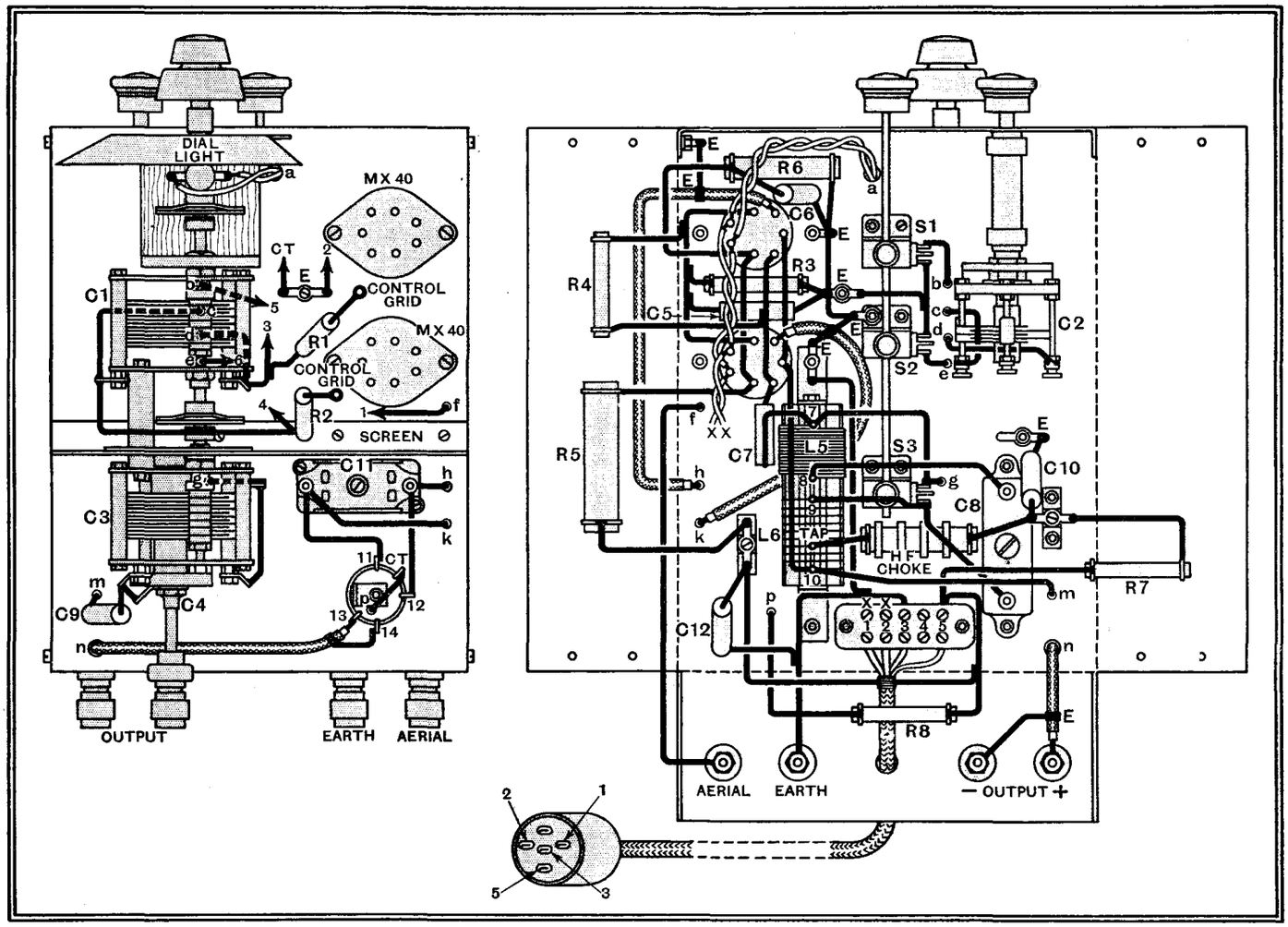

The practical wiring plan and layout of the components on the converter chassis.

AC Short-wave Converter—

coupling between this lead and the oscillator condenser. Should it be necessary a length of the same screened sleeving as used for some of the wiring in the unit can be employed; the metal sheathing forming the earthed connection.

With the broadcast set adjusted to 500 metres and the converter connected to its power pack, we are ready for the preliminary tests. While range one, the shorter, which is brought into use by rotating the wave-change switch anti-clockwise, should be dealt with first, if the tests are made during the evening when signals on this band are not at their best, range two should be used.

The series padding for range one is obtained by a fixed condenser C9, so that the adjustments for range two are not dependent on any adjustments for the lower band other than that of the parallel trimmer C4. However, any corrections can always be made later if found necessary.

The pre-set condenser C11, tuning the output transformer primary, is now set to its maximum capacity and backed off about half a turn; the oscillator trimming condenser, C4, is adjusted with its plates just engaging and C2 set to about half its capacity.

The oscillator and aerial circuits are now lined up at the bottom of the range, the main tuning condenser being set at about 10 degrees on the scale. C4 only should be used for this adjustment, but very little capacity is needed or the oscillator will be set to the wrong beat. It must be adjusted to a higher frequency than the aerial, that is to say, a slightly lower wavelength. At first this may be a little difficult to judge, particularly in a quiet situation, but the sensitivity of the unit can usually be gauged by the background noise. As the oscillator and aerial circuits can be lined up at two settlings of C4, that giving the smallest capacity is the correct one.

A full-size blue print of the wiring diagrams, including the constructional details of the coils, is available from the Publishers, Dorset House, Stamford Street, London, S.E.1. Price 1s. 6d. post free

Now rotate the tuning dial to about 160 degrees on the scale and adjust C8 for best sensitivity. There will be several stations working about this wavelength so that the adjustment can be made on a signal. It must be remembered that adjustments of C8 alter the oscillator frequency, and the main condenser must be corrected accordingly.

There are no reliable key stations that can be taken as a guide when setting up a short-wave converter, but the ganging is far less difficult in practice than its written description implies. The aerial circuit is not so critical that it precludes receiving something even though it be badly out of adjustment, and this is all to the good. Further, the aerial trimmer C2 gives a clue to any misganging and corrections are easily made.

When correctly set up the unit will tune on range one from 13 to 29 metres, while range two has a coverage of from 26.5 to 53 metres. Zeesen, working on 31.45 metres, should tune in at about 60 on a 180-degree scale on range two, while GSD, the Empire station on 25.53 metres, is received at about 166 on range one.

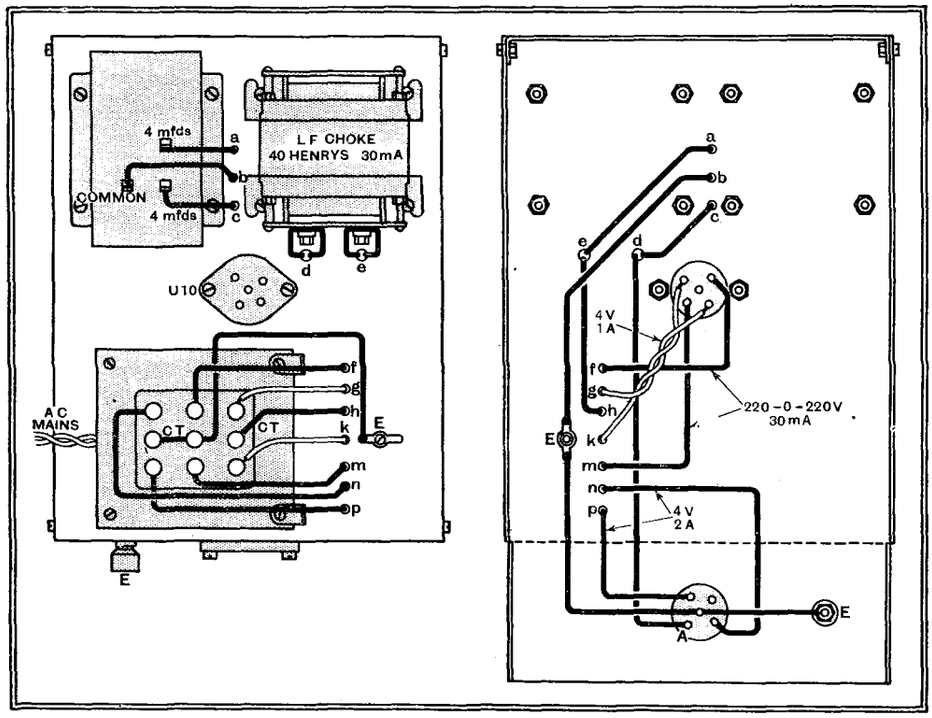

Position of the components on the power pack chassis and the wiring details.

FOR READING THE ABACS

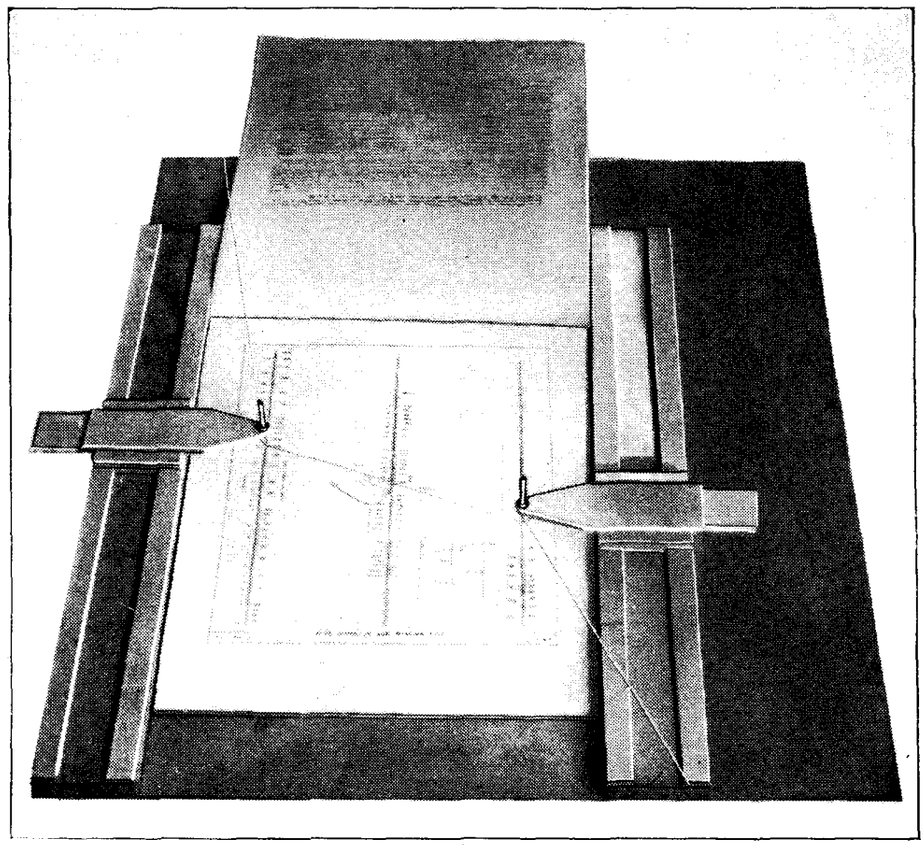

DRUDGERY OF CALCULATIONS AVOIDED.—Many constant use of our Radio Data Charts (including the technical staff of "The Wireless World" themselves) use a flat celluloid ruler scored with a fine line. This is an improvement over the plain non-transparent ruler, but a reader (Mr. Stanley Pulsford) has devised an even more rapid and convenient way of taking readings. As shown in this photograph, a carrier for the book of charts is fitted with guides for two adjustable slides; each of these carry a needle through the eyes of which is passed a thread kept taut by weights. The tensioned thread acts as an indicating line.

The B.B.C.'s Flying Squad

First Description of the New Mobile Recording Unit

FOLLOWING the lead of the German Reichsrundfunk the B.B.C. now records outdoor events for subsequent broadcasting, using a mobile unit for the purpose. Here is the first illustrated account of the Corporation's latest "mystery van."

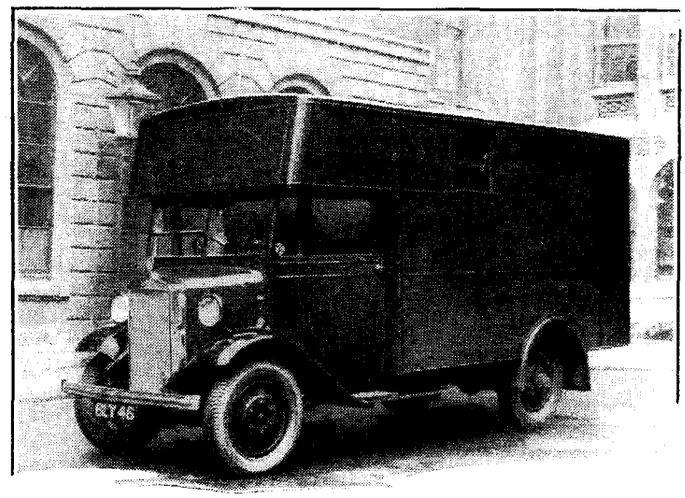

The van is even more self-effacing in appearance than a police car.

LESS than six weeks old, the Mobile Recording Branch is the B.B.C.'s youngest "baby"—a healthy, independent infant admitting no filial ties with the Outside Broadcasting Department, and answerable for its comings and goings only to the chief of the Presentation Branch.

One day its vehicles may run to a fleet, but at present the branch owns a single van, referred to officially as the Mobile Recording Unit, and manned by a crew of five, with Mr. H. L. Fletcher in charge. As an example of the independence of the section it may be mentioned that Mr. Fletcher not only supervises the installation of the gear when the unit arrives at its predetermined pitch, and helps in the testing and placing of microphones; he also supplies the commentary and himself does the sub-editing and "mixing" at Broadcasting House, handing over the completed sound picture to Mr. Coatman's department for incorporation in the News Bulletins, or to the Dramatic Department for the garnishing of a feature programme.

The "Flying Squad"—to use its familiar nickname—enjoys a freelance existence. Whereas the "O.B." department is concerned primarily with the business of direct broadcasting and is largely governed by the time factor, the Flying Squad can go anywhere at any time, capture the wanted sounds, and amble home again to Broadcasting House with a tolerable disregard for the passing hours. Sometimes, of course, a rush job is involved, and on such occasions the cable can be run out and the microphones erected, fire brigade fashion, inside the space of five minutes. The return journey to Broadcasting House is then up to the best fire brigade traditions.

The van is a Morris Commercial, and the whole of the interior is occupied by the recording equipment in duplicate, each section consisting of turntable, A and B amplifiers, and batteries. They are linked by a mixing panel with provision for four microphone circuits.

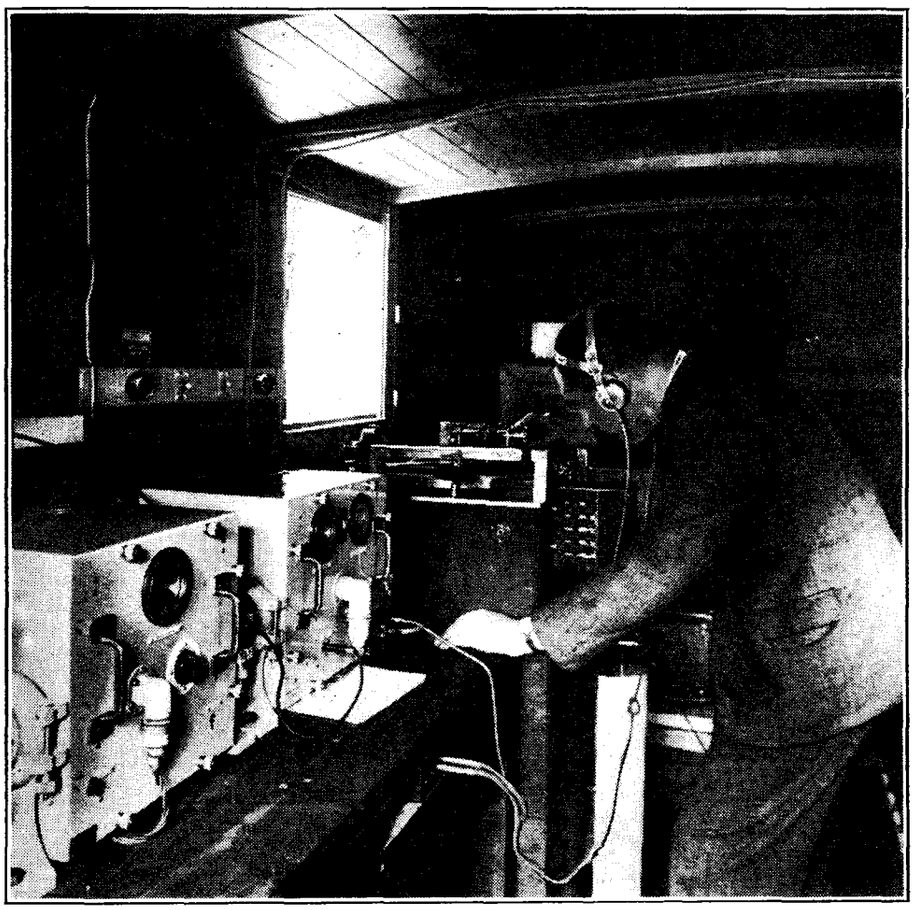

The recording gear in action. Twelve-inch metal discs are used with a facing of cellulose compound. In practice recording is usually carried out in duplicate.

Recording in Duplicate

The 12-inch records, which play for four minutes each, are composed of metal covered with a cellulose compound in which the sound groove is cut. Immediately a record is completed it is hardened by dipping in acetic acid and can then be played back at least a dozen times without perceptible wear.

Recording is usually carried out in duplicate to guard against accidents, but when a continuous sound picture, lasting more than four minutes, is required, recording is done in the manner of cigarette chain smoking, i.e., first one turntable and then the other is employed, with a small overlap to preserve continuity.

The van is even more self-effacing in appearance than a police car, but even so it is sometimes impossible to bring it nearer than a hundred yards to the scene of activity. Actually several hundred yards of cable can be used when necessary,

The B.B.C.'s Flying Squad—

in conjunction with the small Western Electric moving coil microphones. These are very sensitive and highly directional, and great care has to be observed in positioning them to obtain the best results.

The van is a self-contained unit, power being derived from accumulators which are charged by dynamos driven by the car motor.

When the unit is in operation each member of the "crew" is at his appointed station. Sometimes the commentator makes his observations on the spot, speaking into a microphone which is already picking up the wanted sounds. Sometimes he must discreetly retire from the crowd to give his commentary on the seat next to the driver, whose compartment is enclosed and practically sound-proof, thus providing a miniature studio.

Record Editing

When the section fold up their tents like the Arabs, the next piece of work is in the "play-back" room at Broadcasting House, where the various records taken are played through a mixing panel, the best sections extracted and re-recorded, and the whole sub-edited much in the same manner as a news film.

The Flying Squad maintains its own library of records at Broadcasting House and these are already in demand by the Effects Department as they form an invaluable supplement to the existing Blattnerphone records.

The Unit's first task was the recording in connection with the feature programme, "Gale Warning," which was such a success a month ago. This involved visits to Battersea and Lots Road Power Stations, and other noisy places.

But the most exciting piece of work for all concerned has been the recent recording for "Railway Rhythm," the special feature to be presented in the Regional programme on May 1st. To get sound effects in the railway shunting yards at March (Cambs), the van was run on to a truck, travelling to and fro over the metals for nearly two miles, while Claude Hulbert supplied a running commentary of gags which are now in cold storage awaiting release.

E. C. T.

The engineer-in-charge adjusting one of the microphones intended for picking up band music and sounds of marching.

Mr. Fletcher in the Courtyard of the Guildhall, London, last week when he gave his commentary on the arrival of the officers and men of H.M.A.S. "Australia."

Short-wave Broadcasting

A SPELL of marvellous conditions coincided with the beginning of April, and shows no sign of falling off, as is usually the case. The American stations on the 19- and 16-metre bands are coming in with greater strength and reliability than they have done for more than a year, and there are distinct signs that the favourable tendency of the sun-spot cycle is making itself felt.

Together with this general improvement we have also the beneficial effect of the longer hours of daylight, with the result that the 19-metre band is still "alive" as late as 10 p.m. or even after. The 20-metre amateur band is usually full of American signals up till 11.30 p.m., and some of the U.S.A. "'phones" on that band are quite comparable in strength with the broadcast stations.

Forty-nine metres is beginning to be troubled a little by atmospherics, and, as always happens, the popularity of that band will probably fall off during the summer in favour of the shorter waves.

The Empire programme for Jubilee Week is one of the most ambitious yet attempted by the B.B.C., and includes direct transmissions or electrical recordings of all the principal programmes of the week. The new experimental transmissions to Western Canada, from 3 a.m. till 4 a.m., on Sunday, Monday, Wednesday and Friday, will continue until further notice. They are being well received.

The comparatively new station, VK3LR, at Lyndhurst, Australia, in the 31-metre band, is achieving a world-wide reputation. Hardly a letter reaches me in which it is not mentioned. VK3LR frequently relays the Empire programme to Australian listeners, and several British listeners have heard the Daventry programmes over a distance of 22,000 miles or so!

VK2ME (Sydney) also claims a fair share of attention from listeners in this country on Sunday afternoons. This station, for some listeners, is actually described as "providing an alternative Sunday programme to the B.B.C." The strength of signals appears to vary very little from one week-end to another, and consistently clear reception is possible with the most modest of short-wave receivers.

A letter from an Australian reader gives an insight into the extraordinary diversity of short-wave reception in different parts of the world. Most of the Americans who are so consistent in this country are absolutely unreliable to this particular reader, whose chief stations are those that we do not often hear in England.

ZHJ (Penang), ZHI (Singapore), KAY (Manila), VP1A (Fiji) and some of the stations in Indo-China are, of course, "locals" for Australian listeners. How many British listeners can claim to have heard the first four?

Several Australian commercial telephony stations transmit music, or relay other stations, for experimental purposes. Among these are Sydney (VLK), on 30.7 metres, and Melbourne (VIY), on 24.98 metres.

Several of the R.C.A. stations at Rocky Point, N.J., also relay broadcast programmes, and are often so strongly received in this country that they eclipse the actual broadcast stations. There is one at the low-frequency end of the 20-metre amateur band—probably WQP—that is heard nearly every day.

The Italian relays of programmes from Tokio (JOAK) continue to mystify and disappoint short-wave listeners. Many are the disillusions that follow these transmissions when the Italian announcer clearly gives the call-sign of the station IRM!

MEGACYCLE.

THE RADIO INDUSTRY

THE scope of the K.B. "Rejectostat" screened aerial system for the suppression of electrical interference has recently been extended to enable up to 1,000 receivers to be operated simultaneously from a single aerial. A booklet describing this community aerial system as applied to blocks of flats, hotels, etc., has been prepared, and copies are available from Kolster-Brandes, Ltd., Cray Works, Sidcup, Kent.

The large Class "B" amplifier illustrated on page 281 of our issue for March 22nd, 1935, is a product of Sifam Amplifiers, York Works, Browning Street, London, S.E.17. This firm specialise in the production of amplifiers with outputs between 20 and 250 watts.

The prices of the latest models of Celestion speakers are as follows:—TK3, a high-note tweeter with an exceedingly light moving coil attached to a small aluminium diaphragm, with small horn; frequency band from 1,500 to 9,000 c/s. £3 14s. (complete with transformer); PPM/TK3, £4 8s. (complete with transformer).

Heart Testing by Cathode Ray

A Description of the Cossor-Robertson Cardiograph

AMONG the many new applications of the cathode ray tube is that of providing physicians with a reliable and instantaneous "picture" of the functioning of a patient's heart. This article explains how the readings are made and how earlier electrical methods of heart testing are being superseded

The testing equipment in action.

TO be able to obtain an electrical "picture" of the human heart at work enormously simplifies the task of the physician in the treatment of cardiac complaints. It is now possible to gain considerable insight into the disease processes affecting the heart, and to make invaluable deductions, by studying the time relation and the shape of electrocardiograms taken in three "leads," i.e., between the right and left hands of the subject, between the right hand and left foot, and between the left hand and left foot.

To provide these electrocardiograms, an interesting application of the Cathode-Ray Oscillograph is now being employed.

That there is an electrical change accompanying the heart beat in the human subject was first demonstrated by A. D. Waller in this country in 1887. He used the Capillary Electrometer, which was being used at that time by many physiologists to study the minute potentials produced by the activity of living tissues. It was not until 1903, however, when the String Galvanometer was invented by Einthoven, of Leyden, that the detailed study of the human electrocardiogram was begun and that the electrical changes accompanying disease of the heart were investigated. One of the first physicians in this country to realise the importance of electrocardiography as an aid to medical diagnosis was Sir Thomas Lewis, and it is to him that we owe a great deal of our exact knowledge of the human electrocardiogram, both in normal subjects and in diseased conditions. The String Galvanometer has so far been the standard instrument used in electrocardiography, and most of the electrocardiograms illustrating medical articles and text-books are taken with its aid. It has, however, a number of disadvantages as a practical instrument for use in medical practice. These are detailed below. The designers of the Cossor-Robertson Cardiograph have been able to eliminate all these disadvantages in their new instrument.

The Human Electrocardiogram

Fig. 1 illustrates typical curves obtained from a normal subject by means of the Cossor-Robertson Cardiograph. In the ordinates, 1 cm. represents 1 millivolt, and in the abscissa 2 cms. represent 1 second.

These three curves are taken in Einthoven's three standard "leads," to which reference has already been made. They are as follow:—

Lead I.—The instrument is connected between the right hand and the left hand of the subject by means of sheets of metal, surrounded by pads soaked in saline solution; the curve (Lead I of Fig. 1) represents potential differences appearing across the base of the heart, as indicated in Fig. 2.

Lead II.—The connection is between the right hand and the left foot, and the curve (Lead II of Fig. 1) represents the pd along the long axis of the heart.

Lead III.—The conuection is between left hand and left foot, and the curve (Lead III of Fig. 1) shows the pd appearing along the left border of the heart.

Contrary to usual electrical convention, potentials appearing above the base line are negative (in Fig. 1), since it is found that activity in living tissues is accompanied by the relative electronegativity of the active part compared with an inactive part of the same tissue, so that a current will tend to flow in an outside circuit in a direction which is from the inactive part towards the active part. That is, considering Lead II as an example, at the point R (*vide* Fig. 1, Curve II), that part of the heart nearer the right hand, namely, its base, is in

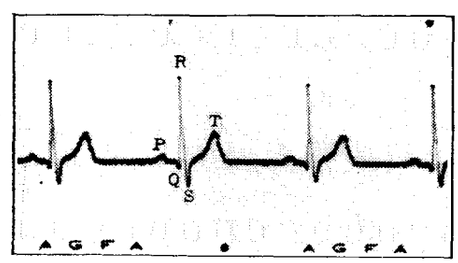

LEAD I.

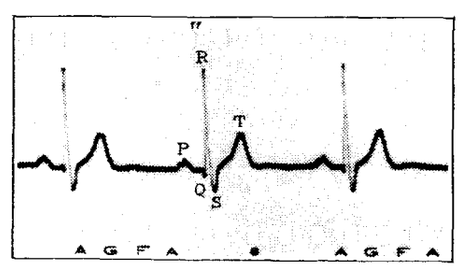

LEAD II.

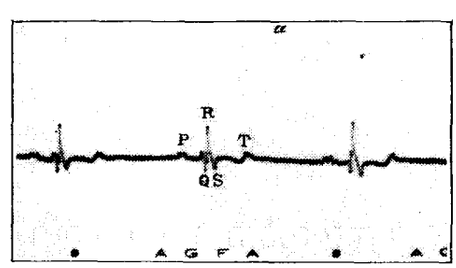

LEAD III.

Fig. 1.—Normal electrocardiograms recorded in the three "leads" by means of the Cossor-Robertson Cardiograph. Each complete wave form represents the electrical events accompanying one heart beat. In the ordinates, 1 cm. represents 1 millivolt, and in the abscissa, 2 cms. represent 1 second.

Heart Testing by Cathode Ray—

active contraction at this instant of time, as compared with the apex of the heart, which is nearer the left foot.

Einthoven designated the peaks of the normal electrocardiogram P, Q, R, S, and

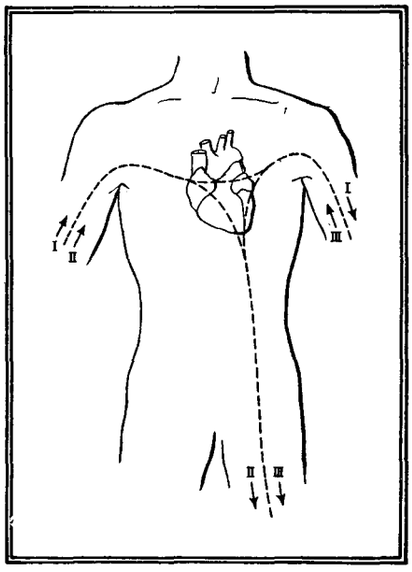

Fig. 2.—Illustrating the three classical electrocardiographic leads. The dotted lines, indicating the lines of potential difference through the heart in each case, are purely diagrammatic and must not be thought to exist as shown. The arrows show the direction of the current for each lead.

T, as shown in Fig. 1. The exact bio-electrical nature of the curve is still not known, but it is known that the component wave P corresponds to events happening in the auricles, the small collecting chambers of the heart into which the veins empty their blood, while Q, R, S, and T are associated with events occurring in the ventricles, which are the large pumping chambers of the heart.

The String Galvanometer, by its nature, has a number of disadvantages as a practical medical instrument. It is, first, a delicate instrument, and it is not difficult to break the fine fibre either by mechanical shock or by an overload voltage. Partly for this reason, and partly owing to its weight and bulk, it is not a portable instrument, although ingenious portable string galvanometers are available. For this reason it is not possible to convey it to the bedside of a patient suffering with acute heart trouble, and very often an electrocardiogram in such a case may be of the utmost value to the attending physician. It is necessary, also, to wait for the development of photographic material before the electrocardiogram is available for inspection; there is no possibility of an immediate visible record of the curve. Secondly, the String Galvanometer shares with all other electromechanical instruments the disadvantage of a moving part which has mass, and, therefore, introduces inevitable distortion by reason of inertia.

In the case of the String Galvanometer the mass of the string is small, but it is, nevertheless, appreciable, so that there must be some distortion due to this cause. Further, as the fibre is connected directly in circuit with the patient, two important electrical defects become apparent. The first of these is that the fibre (or "string"), having usually a resistance of about 3,000 ohms, draws an appreciable current from the patient, and this will distort the curve of potential difference, giving a false idea of electrical events happening within the heart. Since this current flows, it is also necessary to use non-polarisable electrodes for the connection of the instrument to the patient, and it has been shown by Lewis and others that if this is not done appreciable distortion may occur, due to polarisation of the electrodes. Such electrodes add to the difficulties of transport.

The second defect is due to the fact that there exists a DC component of the voltage from any individual due to what are loosely called "skin currents," which are constant potential differences caused partly by contact potentials between the electrodes used and the skin, and partly by the activity of the skin itself.

Using the Cathode Ray Oscillograph

In the Cossor-Robertson Cardiograph all these disadvantages inherent in the String Galvanometer have been overcome by the use of the Cathode Ray Oscillograph, combined with an amplifier of special design and with certain other circuit arrangements. In addition, it has been possible to add some new features, which make the instrument of greater practical use to the physician. It is not proposed here to do more than outline some of the electrical arrangements of the instrument.

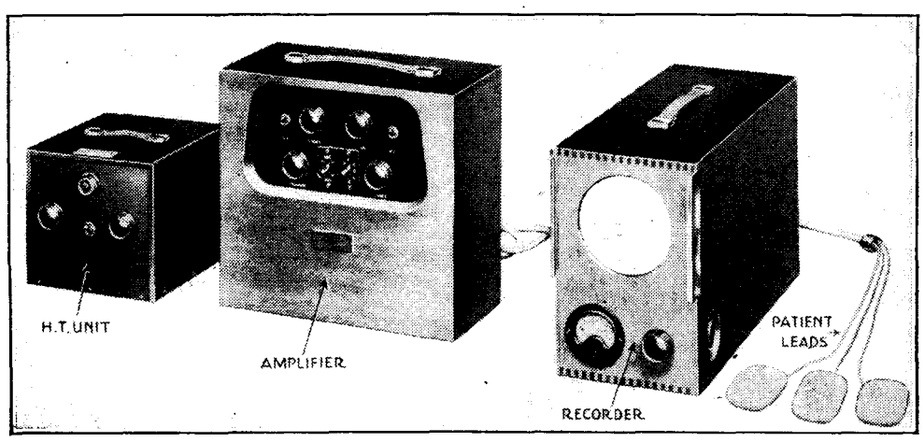

Fig. 3.—The complete apparatus, minus the camera, which can be seen in the title illustration. The compactness and portability of the apparatus is clearly apparent.

For portability the Cardiograph is made in units. The Recorder Unit, comprising the Cathode Ray Oscillograph and its immediate supplies and controls, etc.; the Amplifier Unit; the Camera Unit, for the photographic recording of the electrocardiogram; and the High-tension Supply Unit. This last unit gives a high potential supply for the oscillograph gun and for certain parts of the Amplifier Unit, and it may take one of two forms, according to the electricity supply available. In the case of AC mains it takes the form of the usual transformer and rectifying valve arrangement.

In this particular unit there is also a circuit whereby interference from the AC mains, which is for the most part picked up capacitatively by the patient himself, is exactly neutralised, so that it cannot interfere with the electrocardiogram. This is done by opposing to the interfering 50 cycle sine wave a sine wave exactly equal in amplitude and opposite in phase, obtained from the interfering AC mains source itself, and so, obviously, of exactly the correct frequency. Previously it was nearly always necessary, where the main electric supply is by AC, for the doctor to have to switch off the current at the main before it was possible to get any sort of readable electrocardiogram. The other type of HT supply unit is a small rotary convertor, specially made by Rotax, Ltd., for the Cossor-Robertson Cardiograph. The input voltage for this is 12 volts, so that it is possible to run it either from a 12-volt accumulator, which may be the motor-car accumulator, where the instrument is used in country places where there is no electricity supply, or, by means of a specially made resistance adaptor, from DC electric mains.

The Cathode Ray Oscillograph possesses many obvious advantages for this type of work. With it there is no distortion whatever by reason of inertia of the moving part; no harm is done by overload voltages; it is a great deal more robust than any galvanometer with a delicate mechanical moving part; and, for practical electrocardiography, perhaps the most important advantage in the Cossor-Robertson Cardiograph is that it has been possible to arrange for immediate visual observation of the electrocardiogram by the patient's bedside.

This has been done by making the fluorescent screen of a new substance which possesses an afterglow of several seconds' duration, so that several cycles of the cardiogram are visible simultaneously. The practical advantage of this to the physician is very great, for it is no

Heart Testing by Cathode Ray—

longer necessary for him to have to wait for the development of photographic material before he can inspect the electrocardiogram; he can now examine the electrocardiogram immediately at the bedside of the patient as it is being registered. For this purpose it is also necessary to have a method for moving the cathode ray "spot" uniformly, at a speed of about 2 cms. a second, from left to right across the fluorescent screen. This is done by applying a "time base" motion to the "spot" by the simplest method of applying a sawtooth voltage to the horizontal deflecting plates of the oscillograph, namely, the charging of a condenser through a resistance, with a neon discharge tube connected in parallel with the condenser (see "The Bulb of Many Uses," *The Wireless World*, January 11th, 1935).

Although, by this method, the movement of the spot is not strictly linear, it is quite sufficiently so for visual electrocardiography. When the electrocardiogram is being recorded photographically, where accuracy is essential, the time base motion is stopped by suppressing the neon discharge and short-circuiting the working horizontal deflecting plate to gun. Movement of the spot can then only occur in the vertical plane, and the time base motion is now provided by the movement of the photographic film, which is accurately driven at exactly 2.0 cms. per second, as in Fig. 1.

Readers of *The Wireless World* will probably find in the Amplifier design that part of the instrument which is of most interest to them. It will be readily appreciated from Fig. 1 that a suitable amplifier must give undistorted amplification of electrical transients which, compared with even speech frequencies, occur exceedingly slowly. Moreover, the amplification required is considerable (up to 80,000 times), and it is essential that the amplifier shall be absolutely steady and stable.

The Amplifier Design

It would appear, from the nature of the electrical changes to be examined, that a DC amplifier would be necessary, but this has many disadvantages, especially in an instrument which must be essentially practical in character. An RCC amplifier, if possible, will possess many advantages.

First, the DC component (skin potential) of the patient voltage will need no compensation, since the amplifier will automatically take up its mean level after a short settling period, after switching on, or a change of lead.

Secondly, the amount of HT battery material to be carried about is very much less than with a DC amplifier, whatever the design—a very important feature in a portable instrument. The designers have been able to arrange an RCC amplifier giving a flat frequency characteristic from 0.2 to 30 cycles per second, by using coupling condensers and grid leaks of such values as to give a Time Constant between stages of four seconds. The amplifier is kept stable, with these very high coupling time constants, by a low-pass resistance-condenser filter for each valve, the values of which are chosen so that the upper end of the frequency characteristic is high enough to include all frequencies necessary for the undistorted amplification of the higher frequency components of the electrocardiogram. This filter also obviates any special screening of either the amplifier or patient, and is effective for all except interference from 50 cycle AC mains. The special neutralising device incorporated in the AC "mains eliminator," described above, is, however, a very neat neutralising device in this case. The remaining two disadvantages of the String Galvanometer are got over by the use of the valve amplifier. For, as the grid-filament impedance of the first valve of the amplifier is practically infinite, at the frequencies comprising the electrocardiogram, compared with the resistance of the patient, there is no practical current drain by the amplifier from the patient. It therefore follows, first, that no polarisation can occur in the connecting electrodes, so that non-polarisable electrodes are unnecessary, and, secondly, that there is no tendency to distortion of the electrocardiogram, due to current being taken by the apparatus from the patient.

Fig. 3 illustrates the apparatus set up for use, and shows its eminently portable and practical character.

Any reader who wishes to know more about the instrument is referred to the following publications:—

1. "The Cossor-Robertson Cardiograph." Booklet published by A. C. Cossor, Ltd., Highbury Grove, N.5.

2. ROBERTSON, Douglas. "A new electrocardiograph employing the cathode-ray oscillograph as the recording device." Proceedings of the Royal Society of Medicine. 1934. xxvii, 1,541.

Radio Data Charts.—II.

Resistances in Parallel and Capacities in Series

By R. T. BEATTY, M.A., B.E., D.Sc,

HERE is a further contribution to the new series of Radio Data Charts. The Decibel has already appeared in the issue of March 15th. The present Data Chart deals with resistances in parallel and with condensers in series.

IN Fig. 1 the two parallel resistances R_1, R_2, can be replaced by a single resistance R without altering the value of the potential difference E or of the current I. In the first case I is the sum of the two currents E/R_1 and E/R_2; in the second case $I = E/R$. Hence we have $1/R = 1/R_1 + 1/R_2$.

So we must find the reciprocals of R_1 and R_2, add them, and take the reciprocal of the sum. The abac gives the required reciprocals and we have only to perform a simple addition.

Examples

(1) What resistance is equivalent to 5 ohms and 10 ohms in parallel?

From the abac the reciprocals are 0.2 and 0.1. The sum of these is 0.3, which is the reciprocal of 3.33 ohms, according to the abac. Answer, 3.33 ohms.

(2) Resistances of 2, 4, 5 ohms are connected in parallel. What is the equivalent resistance?

Ohms.	Reciprocal.	Equivalent Ohms.
2	0.50	
4	0.25	
5	0.20	
	0.95	1.05

Answer, 1.05 ohms.

Capacities in series obey the same reciprocal law. The equivalent capacity C (Fig. 2) is given by $\frac{1}{C} = \frac{1}{C_1} + \frac{1}{C_2}$

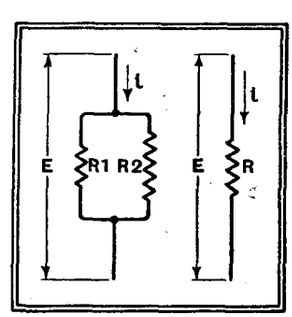

Fig. 1.—Diagram to illustrate relationship between two resistances R_1 R_2 in parallel and one resistance R.

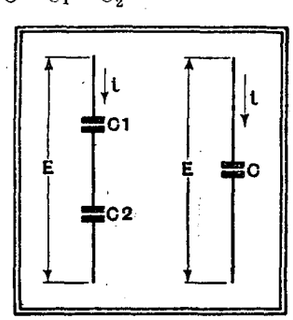

Fig. 2.—The value of two series capacities is ascertained in exactly the same way as that of two parallel resistances.

Radio Data Charts.—II.

Examples

(1) Two capacities of 5 and 10 mmfd. are placed in series. What is the equivalent single capacity?

Capacity in mmfd.	Reciprocal.	Equivalent Capacity. in mmfd.
5	0.2	
10	0.1	
	0.3	3.33

Answer, 3.33 mmfd.

(2) Two capacities of 0.001 mfd. and 0.0001 mfd. are connected in series. What is the equivalent capacity?

Since the second capacity is outside the range of the abac, multiply each capacity by 10.

Capacity in mfd. (×10).	Reciprocal.	Equivalent Capacity in mfd. (×10).
0.01	100	
0.001	1,000	
	1,100	0.000909

Then divide the result by 10.

Answer, 0.0000909 mfd.

NOTE.—We cannot use this abac for a resistance and a reactance in parallel, for the currents in the two members are not in phase, and so the reciprocal law does not hold.

VALUES OF RESISTANCE OR CAPACITY AND RECIPROCALS

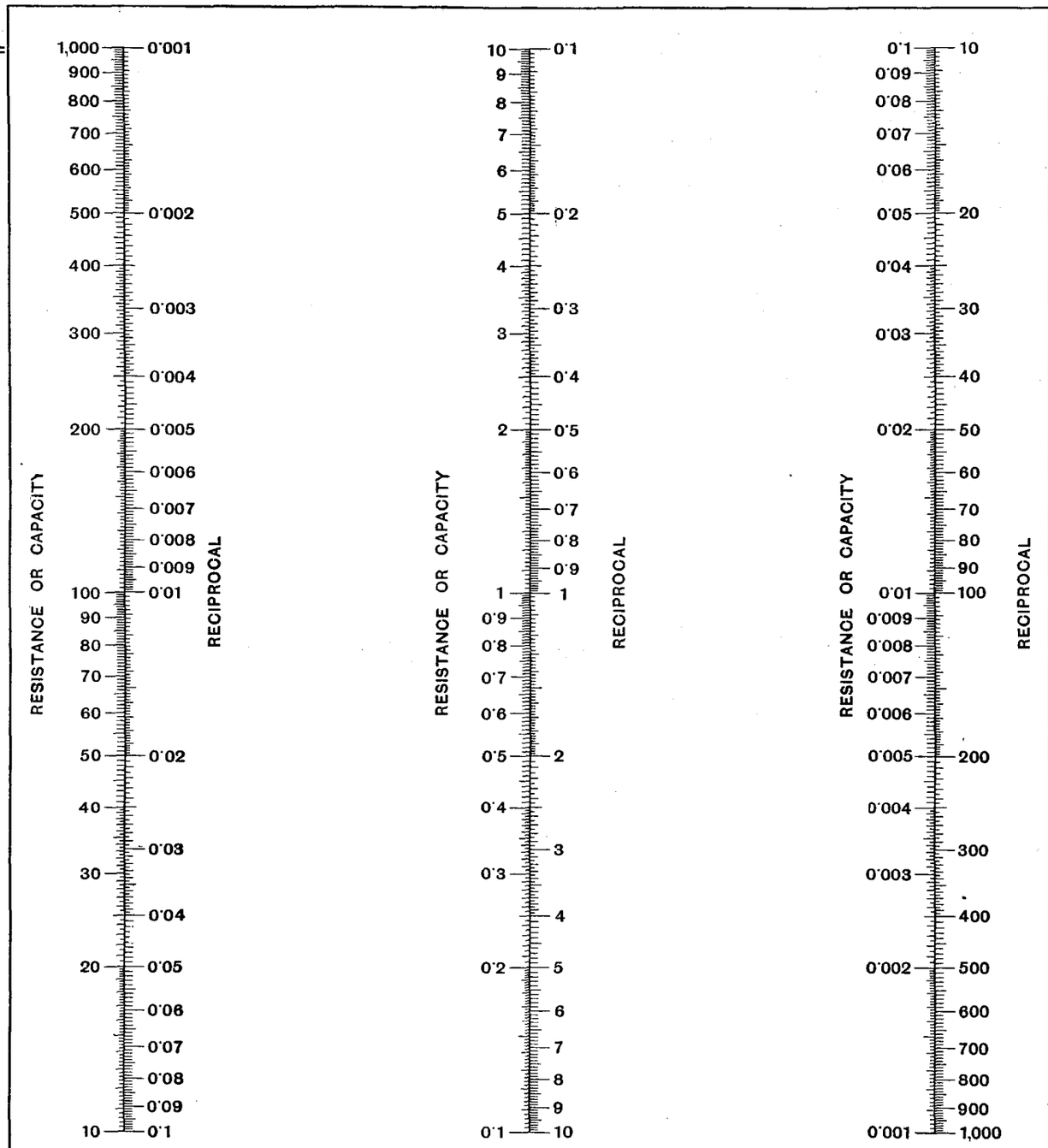

RESISTANCES IN PARALLEL

CAPACITIES IN SERIES

The Wireless World COPYRIGHT

UNBIASED

By FREE GRID

Caveat Emptor

IT is a great pity that there are signs that certain unscrupulous people are taking advantage of the general ignorance of television to indulge in what I can only regard as intentional if passive deception. I thought that the bad old days when the enterprising vendor of so-called super-quality console receivers made good the deficiencies of reproduction by getting into the cabinet and warbling a ditty himself, had gone for ever, but evidently this is not the case, judging by what I saw in a large West End emporium the other day.

A large placard urged me to hasten along to the wireless department and see what wonderful entertainment could be obtained from the television screen of the Blank combined sight and sound receiver. Arrived there, I was astounded to find myself on the edge of a large crowd, and in spite of some vigorous work with my umbrella and elbows it took me some time to force my way through to the front.

When I finally managed to do so I was considerably astonished to find a picture on the television screen having a degree of definition which was well-nigh perfect. I admit that I gaped foolishly, and for the moment imagined that I was actually gazing at television. It suddenly occurred

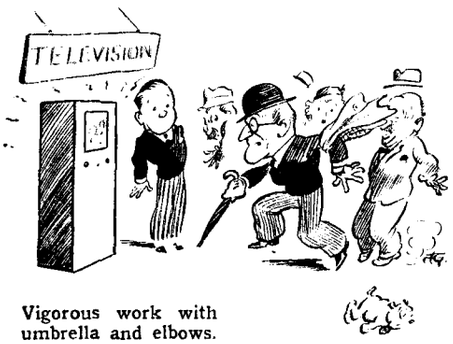

Vigorous work with umbrella and elbows.

to me, however, that so far as I knew there were no experimental high definition transmissions being radiated that afternoon, for, of course, the quality of the picture was completely beyond that of any thirty-line stuff.

Struck by a sudden inspiration, I darted forward and flung up the lid of the contraption a split second before the detaining arm of a salesman reached me. It was as I suspected. Inside was a substandard home cinema projector merrily spinning round. Even this exposure did not bring the crowd on to my side; on the contrary it had the reverse effect, for the assembled mob, most of whom were women, were too ignorant to recognise a home cinema projector when they saw one and imagined that I was robbing them of a free entertainment.

After the uproar had subsided and I was enabled to have a few minutes private conversation with the manager of the shop I was astonished to learn that in his opinion no deception whatever had been practised on anybody, and I must admit that according to the strict letter of the law he was right, but it is the spirit of the thing about which I am complaining.

The machine was a complete home entertainer, and apart from being arranged to provide musical entertainment via radio or records in the usual manner of the ordinary radiogramophone, it was adapted for providing pictorial entertainment, also via radio or records or, in other words, via television or cinema projector, the same screen being in use in each case just as the same loud speaker is used in a radiogramophone irrespective of the source of sound.

The manager was very careful to point out to me that the notices in the shop merely invited the populace to come in and see what wonderful entertainment could be obtained from the television screen of the wretched thing, and did not for a moment imply that it was actually television which was being seen. There are, I understand, several different types of these excellent machines on the market.

Confidential Television News

ONE hears all sorts of rumours as to the site of the London Television station, and it is said that people who are financially interested in possible venues are straining every nerve to influence the advisory committee, but needless to say, without the slightest effect.

I have, however, received information from an unimpeachable source that the B.B.C. have a very great surprise up their sleeves for the general public who believe that the Alexandra Palace or some other elevated locality is to be used for the transmitting station. The transmitting station as well as the studios are likely to be in Broadcasting House, this locality being quite central, and therefore unlikely to cause ill-feeling among dwellers in the Northern or Southern suburbs which would certainly happen if either the Crystal or the Alexandra Palaces were chosen.

My readers will naturally ask how it is possible to use Broadcasting House since the first consideration in the design of an ultra-short wave transmitter, if any reasonable range is to be attained, is that of a lofty and unscreened aerial. The problem is being very simply solved by the use of a captive balloon firmly anchored to the roof of Broadcasting House. My informant tells me that it was first proposed to have the transmitter on the top floor of Broadcasting House and use the anchor cable of the balloon as the aerial.

This has, however, been abandoned in favour of housing the low-powered transmitter in the gondola of the balloon and using a proper dipole aerial. The connections for the microphone will, of course, go up with the anchor cable.

Pigeons, Army, for the Use of

MANY people have written to me regarding the mysterious behaviour of certain carrier pigeons when in the vicinity of high-powered transmitters. According to reports, special experiments have been carried out by permission of the French military authorities.

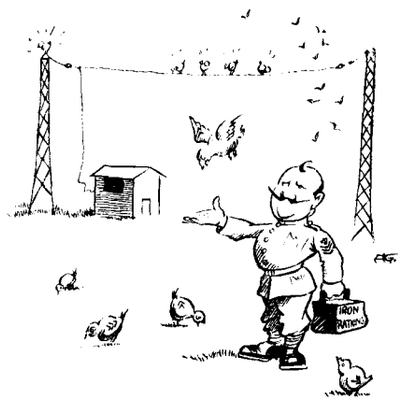

Under the aegis of the military authorities.

Following these tests, it was reported that the pigeons were unable to leave the vicinity of the aerials when transmissions were taking place. No matter how hard they struggled they never got far before they were compelled to turn and "plane back towards the aerials."

My correspondents seem to think that I am a fit and proper person to explain the reason for this sort of thing to them, one of them suggesting that this system might be adapted to the capturing of hostile aircraft. I have, however, received an opinion from a very well-known technical expert, and it would appear that the explanation is very simple.

As you will have observed, the experiments were carried out under the ægis of the military authorities, and it cannot be doubted therefore that they were army pigeons, and consequently fed on a diet of iron rations. It is surely quite natural, therefore, for them to be attracted by the magnetic component of the wave. An alternative suggestion that the phenomenon had something to do with the liquid diet of "a Foreign Correspondent" who reported the incident is quite inadmissible.

ALL-METAL VALVES

A Surprise Announcement in America

NEWS of the production of an entirely new type of all-metal receiving valve has just been released in America and has caused a very considerable stir. Our representative in New York gives us a description of the new valves in this article.

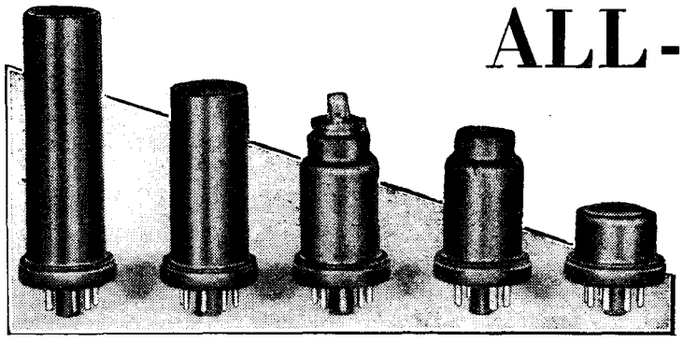

The new range of valves. From left to right, high power output valve, power valve, H.F. amplifier, triode, and duo-diode. All tubes have 6.3 volt heaters.

BREAKING away entirely from the methods of the past, the General Electric Company of America has announced a new line of all-metal receiving valves. These valves have been under development for a year or more, and do not resemble the Catkins which caught the fancy of American radio people because of their unique construction and their homely name.

The new valves are literally made of metal, the only glass being small beads through which the leads enter the valve proper from the outer base prongs. They will be smaller than glass valves, will undoubtedly be much sturdier, and there is a good chance that they will have long lives with a vacuum that actually gets better with age. In time they will probably be less expensive than glass valves because of manufacturing economies made possible by the new construction. Because of its better characteristics as heat radiator and because of its better shielding properties, the metal shell which takes the place of the present-day glass envelope is bound to exert a profound influence on the future of the radio valve art. This move represents a distinct step towards greater mechanisation in the manufacture of valves.

The new valves have the outer metal shell, which is cylindrical in form, made of steel or iron, some with a reduction in diameter at the top. In the HF valves a terminal is at the top for the grid. Each lead-in wire is strung through a bead of glass, which is fused around the wire. This bead of glass with the wire through it is placed in an eyelet of a new alloy, known as Fernico (iron, nickel and cobalt), which has been placed around the hole in the bottom of the valve through which the lead goes. This assembly is then passed through a gas flame which fuses the glass so that it completely fills the hole in the eyelet. The coefficients of expansion of the Fernico eyelet and the glass bead are the same, so that there are no stresses set up in this fusing process which might later cause trouble. We now have a metal base plate or "header," as it is called, through which pass the necessary lead wires led in through glass seals. This is all the glass there is in the tube, a small bead for each lead.

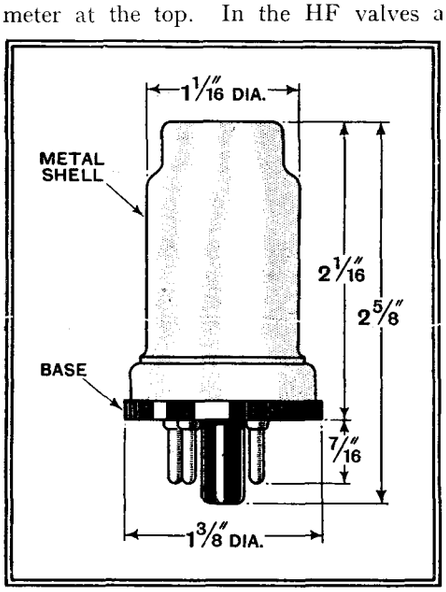

Outline drawing of detector-amplifier.

On this header are assembled the necessary elements as a very sturdy structure. The leads are direct and short, making the valves more useful at lower wavelengths than existing valves. The new design permits a logical arrangement of connections and supports between base pins and electrode structure. The use of short, stiff supports produces an assembly unaffected by vibration.

After the elements have been assembled, attached to the leads, and after a metal tube has been welded to the centre of the header, where there is a hole, the metal outer shell is placed over the structure and securely welded to the metal header. Now the valve is pumped through the metal tube and at the proper time the jaws of a welding machine clamp upon the tube, weld the sides together in an airtight seal, and the end of the tube is cut off.

Higher Amplification : Better Screening

Because so much of the air-space has been eliminated the valves are really much smaller than existing valves, and since the outer shell may be placed very close to the internal elements (steel shells can be made to much closer tolerances than glass envelopes) the internal grid-plate capacity is greatly reduced—it is about one-third that of existing valves. The valves may therefore be of higher amplification factors without danger of instability because of the general strength of construction and freedom from mechanical variations of electrode spacings which can be smaller.

The shell itself is at earth potential, for it does not serve as the anode except in the rectifiers. It will eliminate completely the necessity for shielding the valve after it is placed in its socket in the receiver.

Because of the earthed shell the valves have one more base pin than similar glass valves. The bases of all valves of this type are alike except in the number of pins, and up to eight of these are symmetrically arranged in a circle about an insulated keyed pin. If the valve does not require eight terminals, some of the holes in the socket will not have a corresponding pin. Because the central insulated pin is keyed, the user merely puts the valve in the socket and turns it around until the keyed pin finds the proper slot in which to go.

At present there are ten types of all-metal valve, but only six have been put into production at the Radiotron factory of RCA Manufacturing Company, which will make the valves for the General Electric Company. Among these are a duo-diode with a separate cathode for each diode, each of which is shielded from the other, and an improved frequency changer, a hexode. The diode is only $\frac{5}{8}$in. high.

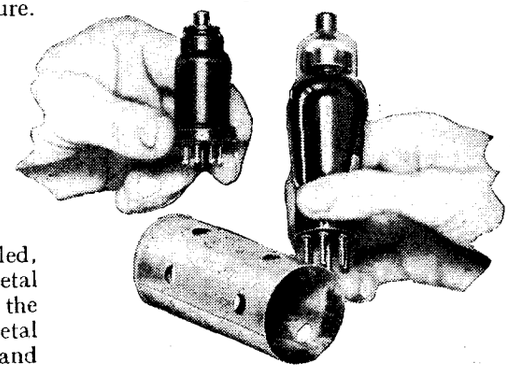

Comparison of new valve requiring no shield with an existing valve of similar characteristics and its shield.

Two developments have made possible the new valve construction: the production of Fernico, the new alloy, and the development of thyratron welding control. By these developments it is now possible to do away with the troublesome feather-edge type of glass-to-metal seal. It is possible to have a vacuum-tight means of sealing off a metal exhaust tubing.

The new valves will first be seen in the General Electric receivers to be made at Bridgeport, Connecticut, the new receiver plant of this company. The sets will appear in the autumn of this year and will be designed around the metal valve.

At first the valves will be more expensive than glass valves, but it is believed that ultimately they will be cheaper.

HINTS and TIPS

Practical Aids to Better Reception

More Constant Coupling

IN an aerial transformer the energy is transferred partly through inductive coupling between the windings and partly through the capacity between them. Both these effects increase with frequency; the voltage induced in the secondary is proportional to the frequency and to the mutual inductance, while the current flowing through the capacity is also proportional to the frequency. Thus, with an assembly of fixed coils, coupling is progressively reduced as wavelength is increased (and vice versa) in normal circumstances. But if the magnetic coupling is greater than the capacity coupling, then the two can be arranged to act in opposition, thus preventing the rapid and almost always undesirable change in sensitivity otherwise obtained. For this opposition to be obtained the windings must be arranged as shown in Fig. 1.

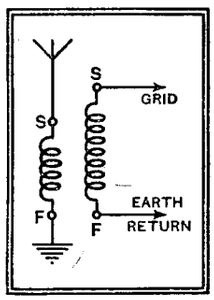

Fig. 1.—Inductive and capacity couplings in opposition: both coils in same direction; S and F denote start and finish of windings.

It should be emphasised, however, that if the aerial winding is situated at the earth end of the secondary, the capacity coupling is relatively small, and the capacity effect will not be marked. If, therefore, it is desired to make full use of the effect under discussion, the winding must be transferred to the top end of the coil. Since this point is at a high voltage, the energy transferred through the capacity naturally increases. It is not that the capacity itself has become appreciably larger, but that the capacity current has been accentuated. The same rule regarding the direction of the windings holds good.

All-wave Coils

INCREASING interest in short-wave work is giving rise to the use of coil assemblies intended to cover a range of short-wave as well as medium-wave bands. Owing to the need for more careful handling on short waves, many experimenters are inclined to be deterred from undertaking their construction, but actually it is not difficult to wind successful coil assemblies if proper precautions are taken.

The several coil sections must, of course, be reasonably separated from each other; a minimum spacing of half an inch is recommended. Opinion is divided as to whether to short out the unused sections or to use a change-over switch, but actually neither method is entirely satisfactory by itself. The main difficulty arises from absorption on any particular waveband from the coil serving the band immediately above it.

Thus in Fig. 2 (*a*) consider the circuit switched for reception on coils C and D in series, while coils A and B are shorted out. Absorption will be found, however, at the wavelength corresponding to coil B tuning with its own self capacity, since this is not actually short-circuited. As a rule this wavelength happens to fall within the band covered by coil C, and a dead spot will result.

In (*b*) is shown an arrangement with a change-over switch, and it will be clear that the trouble is still present—in fact, in an aggravated form. The remedies are to arrange the sections of the coil so that they do not couple to one another, which is not always convenient, or else to arrange to short out the section immediately next to the coil in use, in conjunction with a normal shorting or change-over scheme.

Figs. (*c*) and (*d*) illustrate the methods of achieving this result. A somewhat special form of switch is, of course, necessary, but the complication is not serious and completely avoids the unpleasant dead spots.

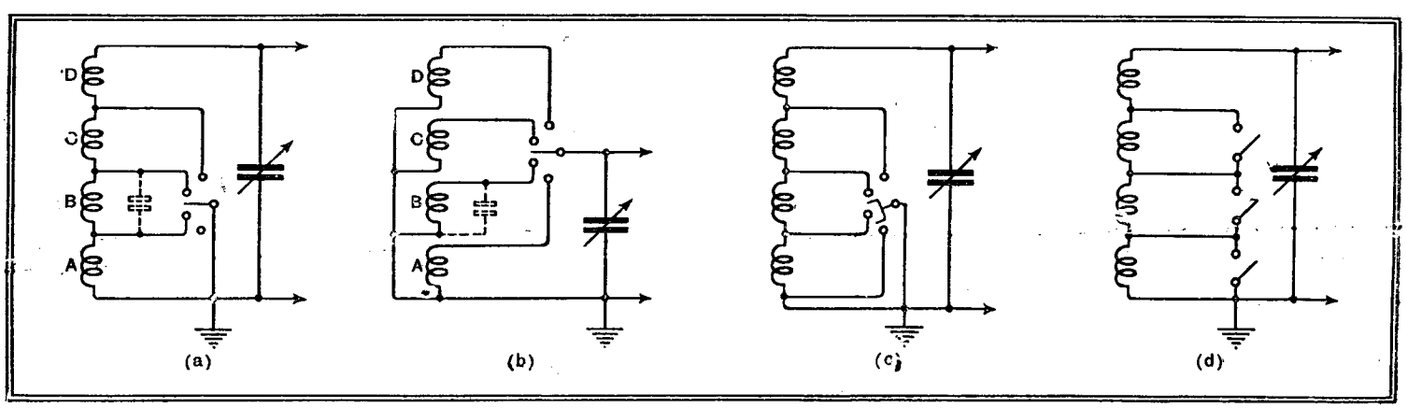

Fig. 2.—Illustrating problems of wave-changing with multiple-band coil assemblies.

Insufficient Amplitude

AN undue amount of background hiss in a superheterodyne is quite likely to be due to the fact that the amplitude of the locally generated oscillations is insufficiently great. It is therefore worth while, in cases where background noises of this particular kind are troublesome, to try the effect of increasing the strength of oscillations; this may be done either by increasing the HT voltage applied to the oscillator anode or by increasing the coupling between grid and anode sections of the oscillator coil assembly.

Straying HF Currents

IN an ideal receiver, HF currents would be finally disposed of in the detector stage and would not be present in the LF amplifier. Such perfection is difficult to achieve in practice, and, indeed, traces of HF energy in the wrong place will often do no harm.

In excess, however, they are likely to give rise to several kinds of trouble, and hence it is always worth while to take pains to provide the best possible filtering. A certain indication that filtering is inadequate is given when operation of a post-detection or LF volume control affects the stability of the HF or detector stages. Effects of this nature are particularly likely to impress themselves on one's notice when critical reaction is being employed.

Current Topics

Events of the Week in Brief Review

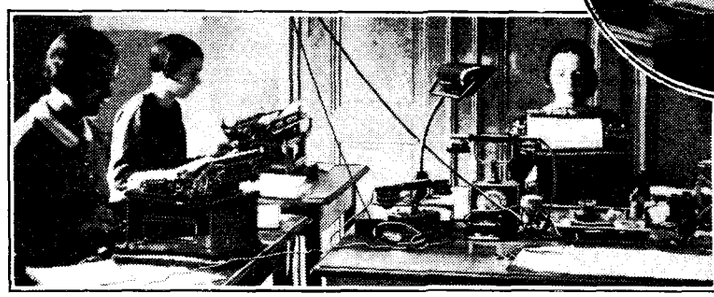

TEN BUSY YEARS. This month the International Broadcasting Union at Geneva celebrates the tenth anniversary of its formation. The stenographers on the left are all fluent in several languages. Inset: Mr. A. R. Burrows, the Secretary-General.

Listeners' Strike ?

NORWEGIAN listeners are threatening to dismantle their receivers unless the broadcast announcers speak in the common language of the people.

An Old Excuse

WIRELESS pirates are running short of excuses. Last week a St. Helens' culprit pleaded that he did not think he required a wireless licence as he had only an indoor aerial. He was fined 10s.

Short Waves from Schenectady

A SPECIAL short-wave transmission under the auspices of the International DX'ers Alliance will be made from W2XAF, Schenectady, on 31.48 metres from 11 p.m. to midnight (G.M.T.) on April 30th. Reports will be welcomed by the Station Manager, W2XAF, Schenectady, N.Y., U.S.A.

Bouquets for Eiffel Tower

M. MANDEL, the French Postmaster - General, attending the "baptism" of the new medium wavelength transmitter at the Eiffel Tower, complimented the authorities on the speed with which the change had been carried out. Before the Mandel *régime* it had been calculated that it would take a whole year to transfer from the long waveband; the actual change-over has been accomplished in nine weeks.

Homage to M. Mandel, as the best "Radio P.M.G." that France has ever had, has reached such a pitch that one writer cannot forbear to mention M. Mandel's extraordinary powers of memory. So thorough is the P.M.G. (says the writer) that he has committed to memory the entire telephone directory.

Musicians' Rights

UNEMPLOYED musicians in Finland have won an important concession from the Government. Henceforth restaurant owners who dismiss an orchestra and install a radiogram will be required to pay a fixed monthly sum to the Musicians' Organisation, the money being collected in the form of a higher licence fee.

Radio on Lifeboats

THE fifty-six lifeboats which will be carried by the new French liner, "Normandie," will each be equipped with wireless transmitting and receiving gear.

Spain Says "No"

THE Spanish Government has banned sponsored programmes and has also placed severe restrictions on the broadcasting of news.

Not Fair

A WIRELESS dealer in one of the poorer parts of Birmingham recently sold a man a moving-coil speaker. Next day the customer was back at the shop with: "Hi! Mister; this ain't no use. I can't get any more stations than I used to; the man next door has got a moving-coil and he gets twice as many as I can." — *Birmingham Evening Despatch.*

High - definition Television in July

BRITAIN has not abandoned the television race with Germany, in which, it must be conceded, Germany at present holds the lead. Mr. L. W. Hayes, of the B.B.C., addressing the International Television Conference at Nice, said that by the end of 1936 there would be nearly twenty television stations operating in Great Britain.

England, he said, will make a strong bid for world leadership in television. At the end of July the first high-definition television station will actually be in operation.

The Radio "Cops"

STRONG arms and flat feet are no longer the primary qualifications of the American policeman. In the near future (writes a correspondent) he will have to know his radio. A police radio school has been launched in Chicopee Falls, Mass., where the Westinghouse Company maintains its radio equipment headquarters. Here an intensive three weeks' radio training school has been established for police officers, who are passed out to give instruction to members of local police departments.

More than two hundred American communities have installed police radio systems, usually comprising radio-controlled cars working on short waves. Provision has been made by the Federal Communications Commission for a sufficient number of wavelengths in the short waveband to permit police radio in every town with a population of 10,000 or more.

Birds and Radio

THE reaction of birds, and especially pigeons, to wireless waves has come up for discussion following recent tests at the Basse-Lande transmitting station, which indicated that the birds lost their sense of direction when in the neighbourhood of the aerial. It is interesting to note that this is not a new observation. The late General Ferrié conducted similar experiments on the Champs de Mars, near the base of the Eiffel Tower, and advanced the opinion that, in a sense, birds are animated wireless receivers.

Radio and War

BROADCASTING may yet stand between the nations and war. The League of Nations has been considering the preliminary draft of an international convention for the use of broadcasting in the cause of peace. The contracting parties would undertake: (1) to prohibit the broadcasting within their territories of incitements to break the peace in other countries; (2) not to incite war; and (3) not to prejudice international understanding by irresponsible statements.

Even in time of war broadcasting might serve to lessen tension and restore a peaceable atmosphere, in the opinion of the International Institute for Intellectual Co-operation, which is sponsoring the convention.

More Australian Stations

TENDERS for the supply of at least five new Regional broadcasting stations, each costing between £150,000 and £200,000, are to be called for by the Australian Government. They will be supplementary to seven other Regional stations now in course of construction. The Australian National broadcasting system at present comprises two stations at Sydney, two at Melbourne, and one each at Brisbane, Adelaide, Perth and Hobart, Rockhampton, Newcastle (N.S.W.), Corowa (N.S.W.), and Crystal Brook (S.A.).

In addition to these there are fifty-five B class, or privately owned, broadcasting stations.

"Radio Amateurs"

THE radio amateurs of America are up in arms. Supported by the American Radio Relay League, they are contesting the right of certain newcomers in the broadcasting field to use the title "radio amateur." These novices are unpaid artists and comedians who gain publicity and experience at the microphone by offering their services free to the small broadcasting stations dotted all over the United States. Recently there has been a glut of "amateur nights."

But what should the real radio amateurs do? "The only solution," says the Radio Relay League, "is to wait until the amateur night fad dies out—if ever. Certainly amateur radio, having lived for thirty years and now far stronger than ever, isn't likely to give way. Meanwhile, the puzzled broadcast listener can only do his best to keep his definitions straight and try not to confuse the warbling crooner with the amateur 'phone expert next door."

The original radio amateurs might try calling themselves *wireless* amateurs.

Wave Distortion in Receivers

PART II.

Precautions for Avoiding Harmonic Distortion

By S. O. PEARSON, B.Sc., A.M.I.E.E.

(Concluded from page 364, April 12th issue)

THIS instalment deals with the difference between frequency distortion, which merely lends artificial coloration to reproduction, and harmonic distortion, which introduces spurious frequencies not present in the original sounds. Harmonic distortion is thus characterised by discordant foreign notes or rasping noises and it is shown that it can largely be prevented by avoiding overloading at every stage

WE have seen how non-uniform frequency response in a receiver can change the character of a note containing harmonic frequencies. No new harmonics are introduced by the apparatus, but those originally present in the complex wave have their amplitudes changed relative to that of the fundamental wave, the quality of the note being altered in consequence.

Now let us see what effect uneven frequency response has on two distinct notes occurring simultaneously, and for simplicity it will be assumed that these notes are pure tones represented by sine waves. It should be observed that when the frequencies of two sound waves do not bear a simple ratio to each other one is not a harmonic of the other, and they represent two notes which are appreciated separately by the human ear. Whether they form a discord or not depends on the musical interval between them. The notes comprising a chord combine to give a harmonious whole, but the individual notes are easily distinguishable, except the two forming an octave, where the higher one is equivalent to a harmonic of the lower.

Disproportionate Amplification

From what has been previously stated it will be realised that even though a receiver may give non-uniform frequency response, a pure tone or sine wave is not in any way distorted, but the degree of amplification it undergoes depends on the frequency. So when two distinct pure tones are passed through the apparatus in the form of sine waves of electrical variation, each will be amplified to a different extent according to the response of the apparatus at the corresponding frequencies. The effect is to reproduce the notes undistorted but at their incorrect relative strengths.

In the case of an orchestral performance, where many frequencies are present throughout the acoustic range, the general effect of unequal frequency response will depend on the shape of the overall response curve, according to which parts of the musical scale are over-accentuated and which are attenuated. It is a fairly easy matter to gauge the type of reproduction to be expected from a receiver merely from an examination of the overall response curve, drawn to a scale of decibels as explained in Part I. It is, however, not so easy to reverse the process and draw the response curve from an audition of the actual output of the receiver.

The overall response curve for a perfect receiver would be a horizontal straight line between the limits of the lowest and highest audible frequencies, and in Fig. 5 the horizontal dotted line represents this ideal "curve." If the response curve slopes upwards towards the higher frequency end of the scale as at A, the receiver will tend to have a high-pitched tone, the treble being brilliant and clear

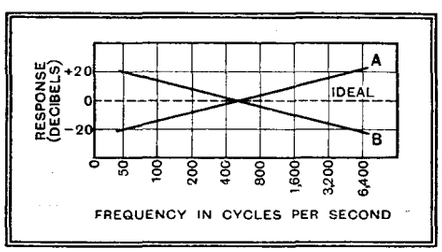

Fig. 5.—Imaginary straight line response "curves."

and the bass comparatively weak, to an extent proportional to the slope of the "curve." On the other hand, if the response curve slopes downwards as at B the treble will be weak compared with the bass, the receiver acquiring a low-pitched tone without any brilliance. The main point that it is required to stress here is that, providing the response curve is moderately straight and not too steep, the reproduction does not forcibly impress one as being distorted; there is no jarring or blasting and no particular note rings out above the rest.

But actual overall response curves are never straight lines. In the first place there is a tendency for them to fall away at the highest and lowest frequencies, not only as a result of the receiver circuit characteristics, but also because the efficiency of most loud speakers falls off at both ends of the acoustic frequency scale. Secondly, irregularities are introduced into the curve because all loud speakers have themselves very irregular frequency-response curves. They are all prone to mechanical resonances at various frequencies; in fact, the diaphragm resonances are relied upon to maintain the efficiency at the higher note frequencies in face of rising electrical impedance; and very often a low-frequency diaphragm resonance is utilised to boost the bass.

Unpleasant Resonances

Thus a practical overall response curve is bound to possess irregularities and to fall off at either end. The aim in designing a high-quality receiver is to maintain the general level of the response curve over the widest possible frequency range and to prevent as far as possible any pronounced humps or dips in the curve. The latter problem devolves mostly upon the designer of the loud speaker.

The worst kind of frequency distortion is that arising through conditions of pronounced resonance occurring at one or more frequencies. Fig. 6 is an example of a response curve for a receiver in which a sharp resonance occurs at about 2,000 c/s. But for the sudden rise in the neighbourhood of this frequency the response curve would be a very good one, the whole range of acoustic frequencies being reproduced at approximately their correct relative levels. But the presence of the hump in the curve shows that all notes with frequencies near 2,000 c/s will be grossly over-accentuated, the reproduction acquiring a peculiar twang which is quite unmistakable. If, when an orchestral performance is being reproduced, the listener walks farther and farther away from the loud speaker, all sounds will become progressively weaker until a point is reached where nothing is heard except the over-accentuated notes in the neighbourhood of 2,000 c/s. It is probably safe to assume that most readers have experienced this effect, to their distress, when a loud speaker has been operating in a distant room, perhaps in the next-door neighbour's house!

Assuming that the sounds reaching the microphone of the transmitter leave noth-

Wave Distortion in Receivers—

ing to be desired, any frequency distortion anywhere in the chain between the microphone and the listener will lower the quality of the reproduction. But there are circumstances where tone correction may be applied with advantage, even in a first-class receiver, to compensate for some defect in the transmission, or to rectify some peculiar acoustic property of the room in which the loud speaker is situated.

We now come to the second important

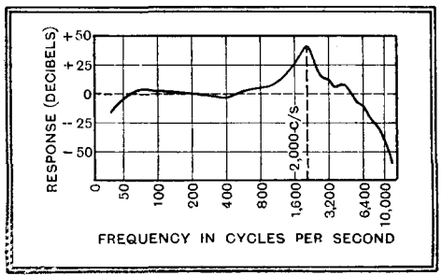

Fig. 6.—Response curve indicating pronounced resonance at 2,000 c/s.

kind of distortion that a sustained note can undergo, namely, harmonic distortion, so called for reasons that will be evident as we proceed. It is for the type of distortion which arises when any part of the apparatus is overloaded, so that the RMS air-pressure developed by the loud speaker is not proportional to the RMS audio-frequency voltage input to the receiver. For a receiver to be free from this type of distortion the operating characteristic of every component which handles the audio-frequency variations must be linear. It is known to every reader that an amplifying valve must be operated over the straight portion of its appropriate characteristic curve if distortion is to be avoided, that distortion occurs if the detector is overloaded, and so on.

Effect of Overloading.

As in the case of frequency distortion, we are not concerned here so much with the methods of preventing distortion as with its nature when it does occur. As a concrete example we shall take the case of an overloaded detector of the power grid type. When the mean rectified current is plotted against the RMS value

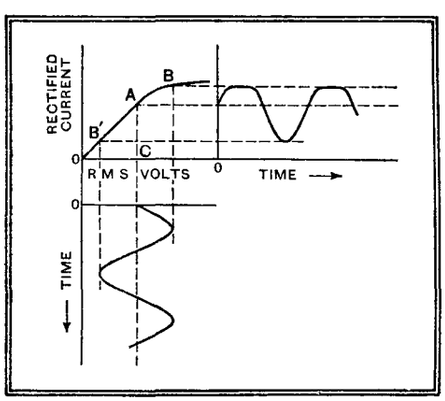

Fig. 7.—Composite diagram showing how a curved characteristic causes wave distortion.

of the high-frequency signal voltage, the type of curve obtained is somewhat as shown at OAB in Fig. 7. It is practically straight over a portion of its length, but bends over at the top as the detector becomes saturated. Now suppose that a high-frequency voltage whose mean amplitude is OC is applied to the detector and that it is modulated at a low frequency according to a sine law, as indicated in the lower portion of Fig. 7, the LF wave thus representing a pure tone. The mean value of the HF wave is purposely chosen so that the point A falls at the top of the straight portion of the curve, where overloading commences.

The modulations cause the mean rectified current to fluctuate between the values represented by B and B′ on the curve, and the constructional lines show clearly how the curve giving the variation of mean rectified current with time is obtained. The latter curve, on the right of Fig. 7, is seen to have the tops of the positive half-waves flattened, so the variation is no longer sine-shaped. In fact, we have a new wave with the same fundamental frequency, *but containing harmonics*, which were not present in the original wave.

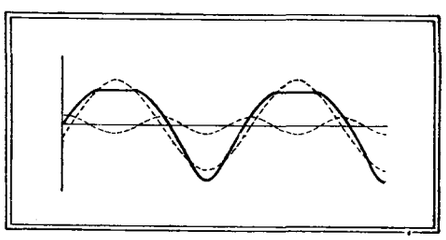

Fig. 8.—The distorted wave of Fig. 7 analysed, showing fundamental and second harmonic sine waves.

This is the essence of harmonic distortion—*the introduction of alien frequencies, which often become audible as discordant sounds.* Their source lies in the operation over non-linear characteristics, and it should be noted that the effect applies to any frequency in the audible range to the same extent, for a given amplitude.

An analysis of the distorted wave of Fig. 7 shows that the predominant alien frequency is a second harmonic, this being the nature of the distortion which also occurs due to an overloaded output valve. The distorted wave is resolved into its fundamental and second harmonic sine waves in Fig. 8.

When the LF modulation of the HF wave is itself complex, as is always the case, matters are very much more complicated. As an illustration we can take a wave like that of Fig. 9 (*a*) which contains a seventh harmonic. If the high-frequency oscillations are modulated according to this wave-shape and applied to the detector to which Fig. 7 refers, the LF output wave would be as at (*b*) in Fig. 9. Not only is the fundamental wave flattened at the top as the pure sine wave was, but the seventh harmonic frequency is almost entirely obliterated periodically at the frequency of the fundamental. This effect is shown clearly in the diagram and results not only in the introduction of foreign notes but also in the production of discordant sounds.

With the aid of the above illustrations it will require very little imagination to

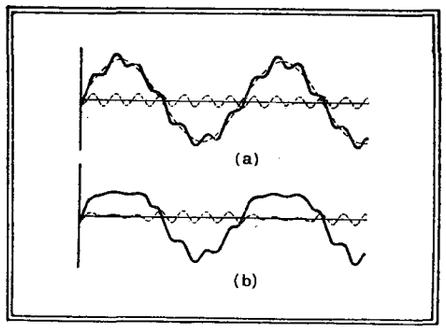

Fig. 9.—Diagram (*a*) shows a wave containing its seventh harmonic, while (*b*) indicates distortion due to an overloaded detector. The seventh harmonic is almost obliterated over positive half-waves of the fundamental.

realise why overloading of any kind results in such shocking distortion in actual practice, where the waves representing music or speech are extremely complex, and vary between wide limits of amplitude.

Worst Form of Distortion.

It now remains to draw a comparison of the two kinds of wave distortion dealt with. As far as their origin is concerned, the essential difference between frequency distortion and harmonic distortion is that the former is a function of the frequency only, whereas the latter is a function of the amplitude, quite independently of the frequency. For this reason harmonic distortion is frequently referred to as amplitude distortion.

In the case of frequency distortion (referred to as attenuation distortion in telephone engineering) no alien tones or noises are introduced into the reproduction, which merely acquires an unnatural tone coloration. It is well known that, providing the degree of distortion is not really excessive, it is possible for an individual to become so inured to it that the ear ceases to notice it—the ear seems able to provide automatic tone compensation in some mysterious way. A set which the owner generally thinks really good often sounds very bad to others.

Harmonic distortion, on the other hand, is characterised by the presence of foreign discordant notes, blasting, and general rasping noises, according to the degree of distortion and its exact nature. Unless there is something radically wrong in the receiver, overloading is the common cause. It is hardly necessary to state that there is no possible excuse for operating a set at a volume beyond the capacity for which it is designed. The common fault of a receiver with a low-power output valve is that it cannot cope with loud passages when the general volume level is too high. The lowest frequency notes have the highest amplitude and the highest notes therefore suffer severely, as illustrated by Fig. 9.

Listeners' C

Outstanding Broadcasts at

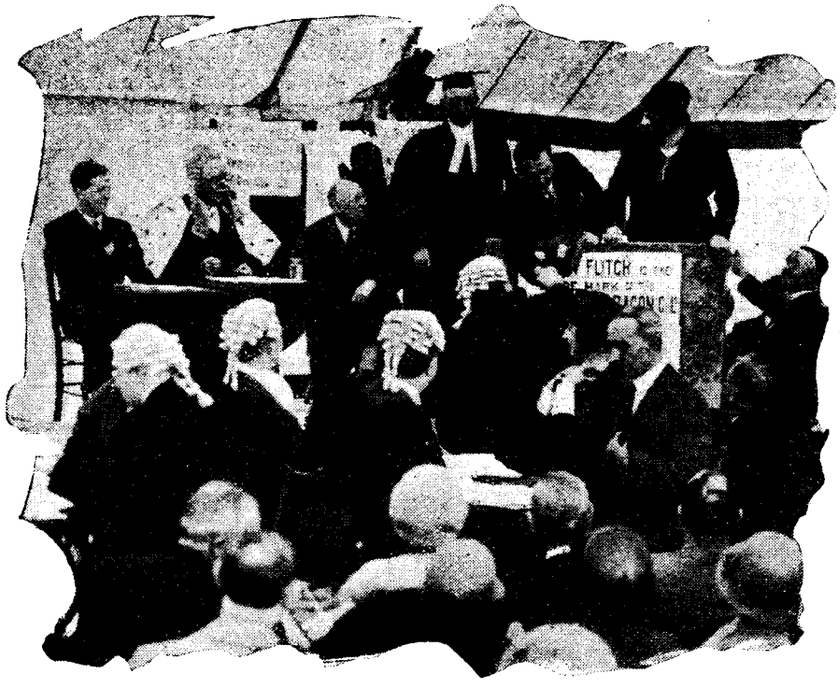

MARRIED LIFE receives its best annual advertisement with the broadcasting of the Trial for the Dunmow Flitch. This year's Trial, presided over by Col. T. Gibbons, D.S.O., will be heard on the Regional wavelengths at 7 p.m. on Monday next.

GOOD FRIDAY

THE Archbishop of Canterbury will be heard on the National wavelengths on the evening of Good Friday in a religious address at St. Sepulchre, Holborn. In the afternoon there is the B.B.C. production of Masefield's "Good Friday," directed by Howard Rose.

The main musical event is the broadcasting of Bach's St. John Passion at the Queen's Hall, with the B.B.C. Symphony Orchestra, conducted by Sir Henry Wood. The soloists include Elsie Suddaby (soprano), Astra Desmond (contralto), Eric Greene (tenor), and Roy Henderson (bass). (National, 7.30.)

EASTER DAY

THE bells of Christ Church, Jerusalem, will precede a talk, relayed from the Holy City, by the Rev. M. L. Maxwell in the National programme on Sunday next, at 5.15. Christ Church, of which Mr. Maxwell is vicar, is a familiar landmark to many pilgrims. It is near the Jaffa Gate and opposite the Citadel, and the massive towers date from the Middle Ages.

The evening service in Winchester Cathedral will be relayed on the National wavelength.

The usual Sunday Orchestral Concert (Regional) consists of Part II of Handel's "Messiah" with the B.C.C. Orchestra (Section D) conducted by Adrian Boult.

GOOD FRIDAY IN EUROPE

GOOD FRIDAY on the Continent will include a fine selection of sacred music. From 8 to 9.15 p.m. Beromunster will relay a Good Friday service by the Lucerne Choir from Berne Cathedral. Budapest, at 7.30, relays Bach's St. Matthew Passion from the Academy of Music, while Hamburg relays a Good Friday concert from Hanover from 10.30 to midnight.

Other notable concerts are: Prague, Dvorak's "Stabat Mater" (8 p.m.); Leipzig, Bach's St. Matthew Passion (7 p.m.); Warsaw, Rossini's "Stabat Mater" (8 p.m.).

30-LINE TELEVISION

Baird Process Transmission. Vision, 261.1 m. : Sound, 296.6 m.

SATURDAY, APRIL 20th, 4.30—5.15 p.m.

Tessa Deane (songs); John Hendrik (songs); Laurie and Tom Devine (dances); Max Kirby (songs and dances); Sydney Jerome's Quintet.

MONDAY, APRIL 22nd, 11.15—12 midnight.

Betty Astell (songs and dances); Victor Leopold (tap dancing); Robert Algar (songs); Haig and Haig (in high spirits).

WEDNESDAY, APRIL 24th, 11—11.45 p.m.

Robert Easton (bass); Sarah Fischer (mezzo-soprano); Daisy Kennedy (violin).

SUFFERERS, PLEASE NOTE

EASTER Knees is believed to be a complaint which afflicts those who take to the wheel in the spring, not having cycled all the winter. Some words of advice on the subject will be offered in a talk by "Hodites," the well-known writer on cycling, on Saturday night, April 20th (National), who will also tell of a cycling tour of the Mendips, on the northern coast of Somerset.

A REMARKABLE CHURCH

ONE of the most remarkable ecclesiastical buildings in the world is the Grundtvig Memorial Church at Bispertjerg, on the outskirts of Copenhagen. A special programme from the church is to be broadcast on Saturday evening at 8 o'clock, and if the sounds are as remarkable as the building from which they come, the broadcast should on no account be missed.

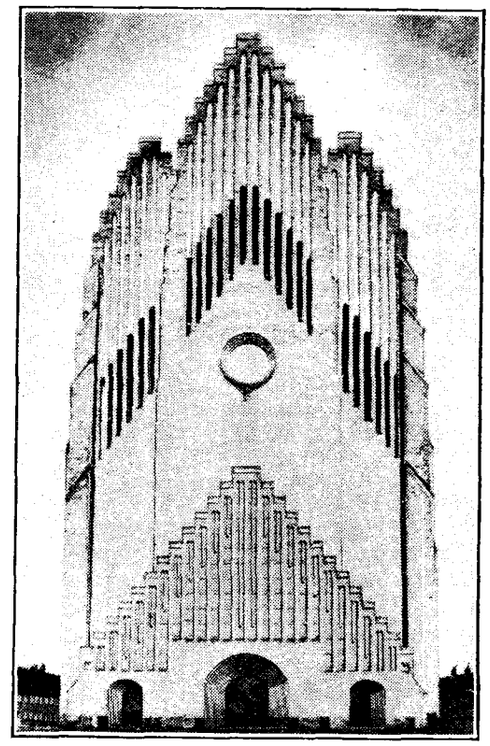

THE WORLD'S STRANGEST CHURCH—the Grundtvig memorial building at Copenhagen—is the scene of a special broadcast from Kalundborg to-morrow evening (Saturday) at 8.

THE DUNMOW FLITCH

LIKE the Budget, the Trial for the Dunmow Flitch gains in attractiveness from the fact that it comes only once a year. In other ways it is less like the Budget, for few staged items by the B.B.C. can equal it as a begetter of spontaneous gags and healthy laughter. At 7 p.m. on Monday, April 22nd, Regional listeners will once again hear the Trial to determine which happy couple deserves the Flitch for not having quarrelled for twelve months. As a rule the judge and jury are well-known humorists; the contestants are supposed to be genuine cases, despite their remarkable claims.

ONE COMPOSER: THREE STYLES

BEETHOVEN'S works fall into three main styles, and these are to be represented in a pianoforte recital from Brussels No. II from 9 to 10 p.m. on Wednesday next, April 24th, the recitalist being Professor Jean du Chastain. He will play Sonatas in C, F minor, and A flat.

Guide for the Week

Home and Abroad

A PHILLPOTTS' PLAY

A REAL West Country flavour should come over the ether on Wednesday next (National, 7.30), when "Yellow Sands," by Eden and Adelaide Phillpotts, is broadcast from the Bristol studios. This racy Devonshire comedy has been adapted as a radio play by Cyril Wood, and promises to get very close to real life, because the players have actually been sought for in various parts of Devonshire. Each will probably be broadcasting for the first time.

EASTER DAY IN JERUSALEM. Pilgrims at prayer on the road to the Cross.

AN "O.B." RECORD

A RATHER notable record may be claimed by the Finnish broadcasting organisation on Good Friday, for there will be no fewer than six "O.B.'s" from various churches.

The day starts at 9 a.m. (B.S.T.) with divine service in Finnish, which will be followed at 12 by a Swedish service and at 2 by a Greek Catholic service. At 3.30 there will be Evensong in Swedish and at 5 p.m. Evensong in Finnish. In the evening, at 7.35, Bach's St. Matthew Passion will be relayed from the Johanneskyrken, Helsinki.

All these events will be relayed by Lahti on 1,807 metres.

"YELLOW SANDS." The scene before Thomas Major's house on the sea beach, with Jenifer Varwell, in the bathchair, and sundry relatives interested in the old lady's last Will and Testament. "Yellow Sands" will be broadcast on Wednesday next (National, 7.30).

GALLIPOLI

THURSDAY next, April 25th, is Anzac Day. In the morning there will be a special broadcast service from St. Clement Danes, and in the evening a dramatic production called "Gallipoli" (National, 8.30). This is to be a sound picture of the epic struggle on the Gallipoli peninsula, following the lines of actuality broadcasts. Sensationalism will not be sought after, and those listeners who have poignant memories of the Gallipoli campaign will find the broadcast a sympathetic one.

"HIT THE DECK"

FOLLOWING presentation in Scotland "Hit the Deck" was staged with great success at the end of 1927 at the London Hippodrome. Listeners will hear a broadcast version in the Regional programme on April 25th, and in the National programme on April 26th. The book was written by Herbert Fields, with lyrics by Leo Robins and Clifford Grey, and is so suitable that it will not require a great deal of adaptation for broadcasting. Three of the most popular tunes in this show are "Hallelujah," "Join the Navy," and "Sometimes I'm Happy."

"AIDA" FROM MILAN

THE B.B.C., in combination with many other stations on the Continent, are taking a relay of Verdi's "Aïda," Acts I and II, performed in the famous Milan Scala on Wednesday evening next. Part I will be heard at 9 p.m., and Part II at 10.5 (National). In the interval Dr. C. B. Hootham will give a talk on Italian opera.

SHAKESPEARE BURLESQUE

FROM the fact that L. du Garde Peach is responsible for the Shakespeare programme, "Merely Players" (National) on Tuesday next, one assumes that there will be an air of burlesque in the proceedings—and the subtitle, "A Fantasy of Dreams and Dollars," confirms the suspicion. The scene is Stratford-on-Avon, and the players include a seeker after knowledge and a ditto after dollars. A tempting item.

THE AUDITOR.

HIGHLIGHTS OF THE WEEK

FRIDAY, APRIL 19th.

Nat., 5, "Good Friday," a play in verse by John Masefield. ¶7.30, Bach's Passion Music (St. John), Queen's Hall.

Reg., London Symphony Orchestra. ¶Pianoforte Recital by Leslie England. ¶B.B.C. Theatre Orchestra.

Abroad.

Hamburg, 10.30, Good Friday Concert from Hanover.

SATURDAY, APRIL 20th.

Nat., Bing Crosby in "Five Hours Back." ¶Band of H.M. Welsh Guards. ¶"Music Hall."

Reg., Recital for Two Pianos by John Tobin and Tilly Connely. ¶"Cavalleria Rusticana" from Sadler's Wells. ¶"American Half Hour."

Abroad.

Vienna, 6.15, "Parsifal" (Wagner) relayed from the State Opera.

SUNDAY, APRIL 21st.

Nat., 5.15, "Easter Day in Jerusalem," relayed from Palestine. ¶Service from Winchester Cathedral. ¶Albert Sandler and the Park Lane Hotel Orchestra.

Reg., B.B.C. Theatre Orchestra in "Spring Comes to Europe." ¶Handel's "Messiah" Part II.

Abroad.

Kalundborg, 8.2, Easter Music from the Cathedral.

Radio-Paris, 8, Concert by the National Orchestra.

MONDAY, APRIL 22nd.

Nat., Harry Roy and Band in "Hurry, Hurry, Hurry!"—an excursion in rhythm. ¶B.B.C. String Orchestra.

Reg., 7, Trial for the Dunmow Flitch. ¶Henry Hall and the B.B.C. Dance Orchestra.

Abroad.

Warsaw, 9, Symphony Concert by the Station Orchestra. Solo Pianist: Sztompka.

TUESDAY, APRIL 23rd.

Nat., Recital by Albert Sammons (violin) and William Murdoch (pianoforte). ¶"Merely Players." ¶"Freedom" by J. L. Garvin.

Reg., Italian Operatic Programme by B.B.C. Military Band. ¶Fred Hartley and His Novelty Quintet.

Abroad.

Kalundborg, 10.15. Czech and Russian Music by the Radio Orchestra.

WEDNESDAY, APRIL 24th.

Nat., 7.30, "Yellow Sands," a Devonshire comedy. ¶"Aida" from Milan.

Reg., Wingates Temperance Band. ¶B.B.C. Orchestra (C) conducted by John Ansell. ¶Organ Recital by G. D. Cunningham.

Abroad.

Toulouse, 8.30, Concert version of "Faust" (Gounod).

THURSDAY, APRIL 25th.

Nat., Recital for Two Pianos by Ethel Bartlett and Rae Robertson. ¶8.30, "Gallipoli." ¶B.B.C. Orchestra (B).

Reg., Henry Hall and the B.B.C. Dance Orchestra. ¶"Hit the Deck."

Abroad.

Strasbourg, 8.45, Opera-Comique, "Joli Gilles" (Poise) with station choir and orchestra.

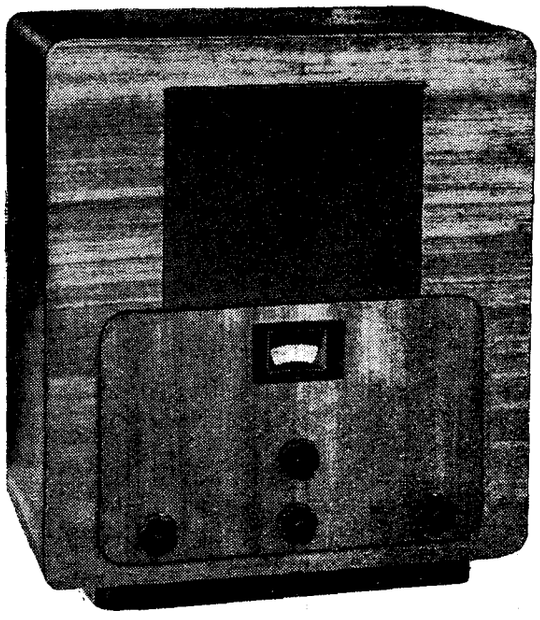

Murphy MODEL A26

A High-grade Receiver of Simplified Design and Moderate Price

FEATURES.—*Type.*—*Table model superheterodyne for AC mains.* *Circuit.*—*Triode-pentode frequency changer.— var-mu pentode IF amplifier — double-diode second detector — pentode output valve. Full-wave valve rectifier.* *Controls.*—*(1) Tuning. (2) Volume and on-off switch. (3) Tone. (4) Waverange.* *Price.*—*£11* *Makers.*—*Murphy Radio Ltd., Welwyn Garden City, Herts.*

THIS set is really a development of the Model A24 in which certain modifications have been introduced to bring the cost down to the £11 level. There has been no compromise in the quality of materials used or the standard of finish and workmanship, since reliability has always been one of the foremost aims of Murphy Radio. The manufacturing economies have been made in two directions; first, in the cabinet design, and, secondly, in the acceptance of a lower overall gain in the receiver.

The design of the cabinet is simple, but its proportions are well-balanced and in construction and finish it is in no way inferior to the cabinets of previous Murphy sets. Instead of the comparatively expensive walnut back panel, however, a pressed fibre back has now been standardised, and another economy which is both simple and ingenious is the use of the wood which has been removed for the loud speaker fret as a raised sub-panel for the controls. The finish is in Australian walnut veneer, the grain of the control panel being vertical and that of the remainder of the front of the set horizontal. A minor improvement in the cabinet design is the provision of a slot in the right-hand side of the base to accommodate the specially prepared list of broadcasting stations which is provided with each set.

Circuit Modifications.

The circuit of the A26 up to the IF stage is the same as that of the A24. The band-pass aerial tuner includes a coupling for reducing second-channel interference and the frequency-changer is a triode pentode. The IF amplifier is a variable-mu pentode and four tuned circuits are used in the input and output couplings. In the second detector stage the triode amplifying portion has been omitted and the valve used in a simple double diode.

The signal rectifying diode is in series with the secondary of the IF transformer and the volume control potentiometer forms part of the diode load. By separating the diode load from the input circuit to the output pentode valve a higher diode load and a lower input impedance have been made possible with a reduction in the possibility of electrostatic hum pick-up.

The AVC diode is parallel-fed from the primary of the output IF transformer and its load resistance is arranged as a potential divider in order to provide a higher degree of control on the frequency changer than on the IF amplifier.

The output connections of the pentode valve are straightforward and a resistance-capacity tone control is connected across the primary of the output transformer. The smoothing arrangements for the HT supply have been simplified but additional decoupling has been provided both in the LF and AVC diode circuits.

It will be noticed that there is no provision in this circuit for the attachment of a gramophone pick-up, but in the near

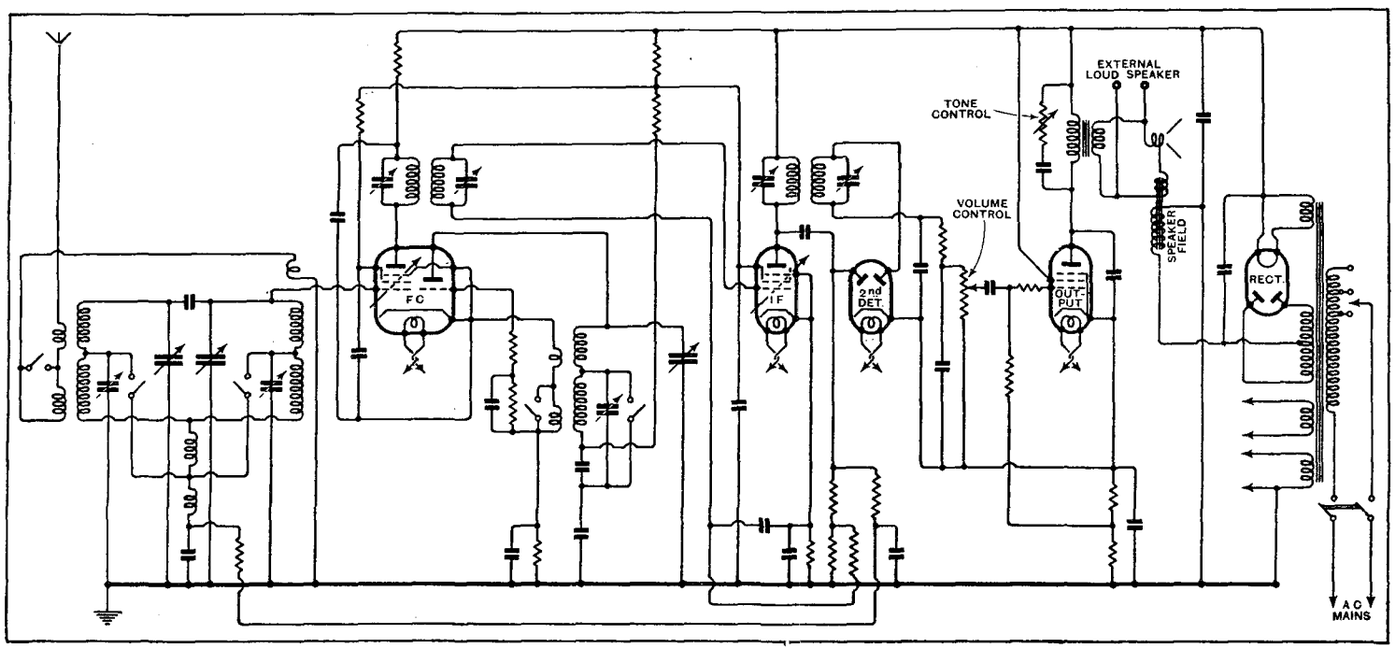

The circuit has been simplified and the number of components reduced by the omission of the triode amplifier from the second detector stage.

Murphy Model A26

future instructions will be issued to dealers indicating how this feature may be introduced where it is definitely required.

The favourable impressions created by the obvious constructional soundness of the chassis and the "goodness" of the cabinet work are carried a step farther when one handles the controls. These are quite silent electrically and are remarkably smooth in action. To preserve the simplicity of the cabinet design the knobs are not provided with identification marks, but after reference to the instruction book the manipulation of each control soon becomes a matter of habit. There are only two positions on the wave-range switch, as the on-off switch is now incorporated with the manual volume control.

Performance

The reduction in overall amplification does not appear to have affected the number of foreign stations available, and there were at least seven good Continental programmes to choose from on the medium waveband during the hours of daylight. The only apparent effect of the omission of the post-detector LF stage is that there is less reserve of volume on some of the distant B.B.C. stations.

The selectivity is hardly sufficient to free the Deutschlandsender from interference from its neighbours in wavelength, even when quality of reproduction is sacrificed to that end by turning the tone control into the extreme low position. On the medium waveband, however, the interference from the National transmitter when received in Central London did not extend for more than two channels and from the Regional transmitter for three channels on either side of the normal settings. Second-channel interference on the medium waveband was negligible and only one faint whistle could be detected at 460 metres. There was, however, a fair sprinkling of oscillator harmonic whistles on the long waveband but, fortunately, these were considerate enough to avoid the settings of the principal long-wave stations.

The range of AVC, which in the case of this receiver is not amplified, will be found to be quite adequate for most people's requirements. The manual volume control must be turned up when changing from local to distant station reception, but once this initial adjustment has been made, the hand control calls for no further attention.

If we except some overemphasis of the upper middle register the quality of reproduction exhibits few of the shortcomings to which we have become accustomed in low-priced superheterodyne receivers. The cross-braced cabinet introduces little, if any, coloration of the bass, which, nevertheless, goes down far enough to include the full compass of the 'cello. The general reproduction is notable, not only for its clarity but also for the "forward" quality of the tone. The sound appears to be emanating from that part of the room in which the set is situated and not merely from the relatively small area occupied by the loud speaker fret. The brilliant top register can, of course, be easily modified by the tone control to one's individual taste.

This set will commend itself to the discerning buyer not only on account of its good range and clear reproduction but also because it is a simply designed, soundly made product from which frills, which may be regarded only as selling points, have been omitted.

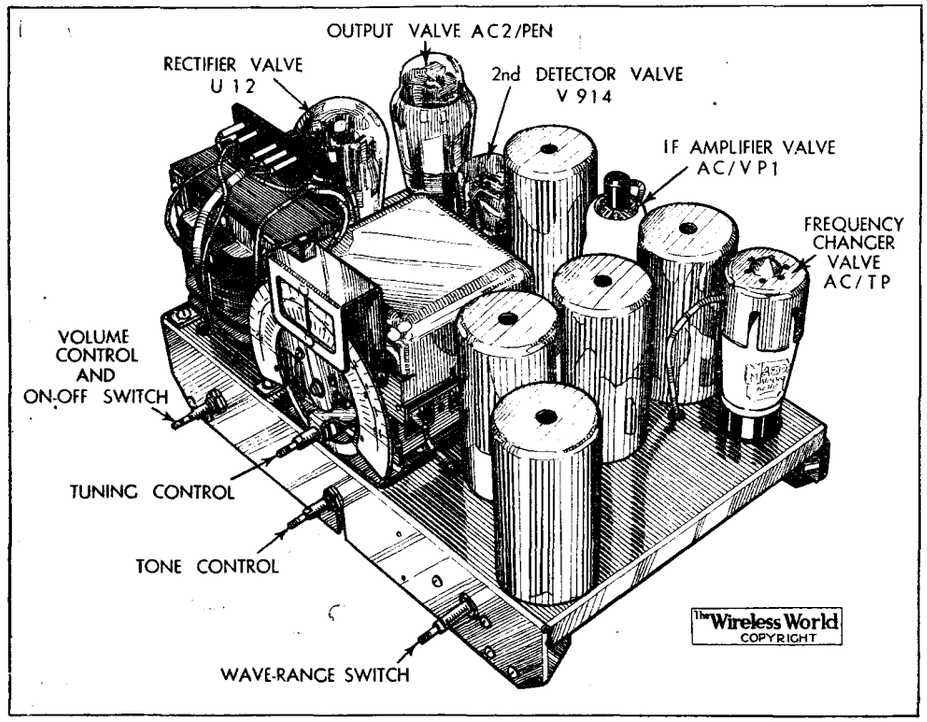

In general layout the A26 chassis closely resembles its predecessor the A24.

Random Radiations

By "DIALLIST"

Droitwich and Quality

SEVERAL people have remarked to me that they are not impressed with the quality of speech transmissions from Droitwich.

They find that if they switch over from the long waves to one of the other Nationals whilst speech is in progress it sounds noticeably better when received from the smaller fry than from the giant. On musical transmissions there is also a difference, but it is not nearly so marked. The reason for these plaints is, I personally think, to be found in the receiver rather than in the transmitter. Many of the older sets, and not a few modern ones, have a considerable amount of boominess in their reproduction, due to cabinet or other resonance. When the tone-balance at the transmitting station is adjusted so as to give perfect reproduction from a high-quality receiver it may well be that speech sounds throaty and boomy when reproduced by a set which relies to some extent on resonance for its "mellowness."

The Little Nationals

MANY people are wondering why the B.B.C. found it necessary to reduce the output power of the London, West and North Nationals from 50 to 20 kilowatts. The reason is that when all three stations were synchronised upon 261.1 metres after the opening of the new Midland Regional it was found that with anything like full power in use a good deal of interference was liable to take place within a station's own service area. The result was to reduce these service areas considerably, since anywhere near the outer fringes of these reception of the National programmes on this wavelength became impossible. By cutting down the power gradually it was found that with 20 kilowatts interference was much less severe and the range of the three stations considerably extended.

German Short-wave Service

GERMANY is making every effort to make her world broadcasting service on the short waves as good as anything of its kind. Taking a leaf out of Daventry's book, the Germans have now instituted zone broadcasting, no less than five different transmissions, each intended for a particular part of the world, being given during the twenty-four hours, and each upon the wave-length most suitable to the hour. Were the service to be purely for entertainment purposes everyone would welcome it with open arms. Unfortunately, as is often the case nowadays, it is being used for propaganda purposes, and the statement that it is intended mainly for the thirty million Germans living abroad does not ring too true when it is remembered that three out of the five zone programmes are conducted in English, and that in the course of the others announce-

ments are made in our language as well as in German. Politics are the curse of broadcasting in many countries at the present day, and if only they could be ousted from the programmes it would be a good thing for humanity at large.

A Way They Have in Austria

I WOULD not, though, go so far as the Austrian pundits who have just enacted a law making it an offence punishable by a large fine, or long imprisonment, to listen to broadcasts that are considered hostile to the present Government. Some of these transmissions come from abroad; others are sent out by illicit stations within Austria's own borders. It seems to me rather silly to make a law which it is almost impossible to enforce. Surely the best way of tackling unauthorised transmission emanating from places in one's own country is to track them down—no difficult business nowadays—and punish those that run them.

They *Will* Do It

THERE are still some pretty queer ideas current on the subject of television, and not a few of them find their way into print *via* the pens of writers who ought to know better. One provincial newspaper published recently a statement by its wireless man that there was no truth in the rumour that no existing receiving set would be of any use for the reception of television when the service came into being. Quite the contrary, he assured his readers: "Many up-to-date sets are quite suitable for reception of television and will require no adjustment or alteration."

This kind of thing does a great deal of harm to wireless. It misleads people into expecting the impossible—until they are brought down to earth with the traditional sickening thud. Readers can do good work by disabusing the minds of their non-technical friends of these and other erroneous ideas about the future of television.

Wireless or Radio ?

AT one time it seemed that English people would always speak of wireless and wireless sets and Americans of radio and radio sets (or just radios). But now there are distinct signs that the term "radio" is becoming more popular in this country, whilst "wireless" is making headway in America. We have, of course, always used "radio" to a considerable extent. The B.B.C. has from the first made use of "radio" in the titles of its publications, and we all speak of a radiogram, of radio-frequencies, of the radio exhibition; the two most important trade societies are the National Association of Radio Manufacturers and the British Radio Valve Makers' Association.

I have seen "wireless" in print in American publications more than once of late, and American speakers have used the word in the Transatlantic Bulletin.

Foundations of Wireless

Part XIX, dealing with the internal screening system of the modern HF valve, will be included in next week's issue.

A MIDGET "TRANSCEIVER"

For Two-way Telephony

ULTRA-SHORT waves (of the order of 5 metres) have properties which make them specially valuable for working over short distances, and it is safe to predict that low-power apparatus operating on this waveband will ultimately be widely used in spheres where radio has not yet properly established itself as a means of communication.

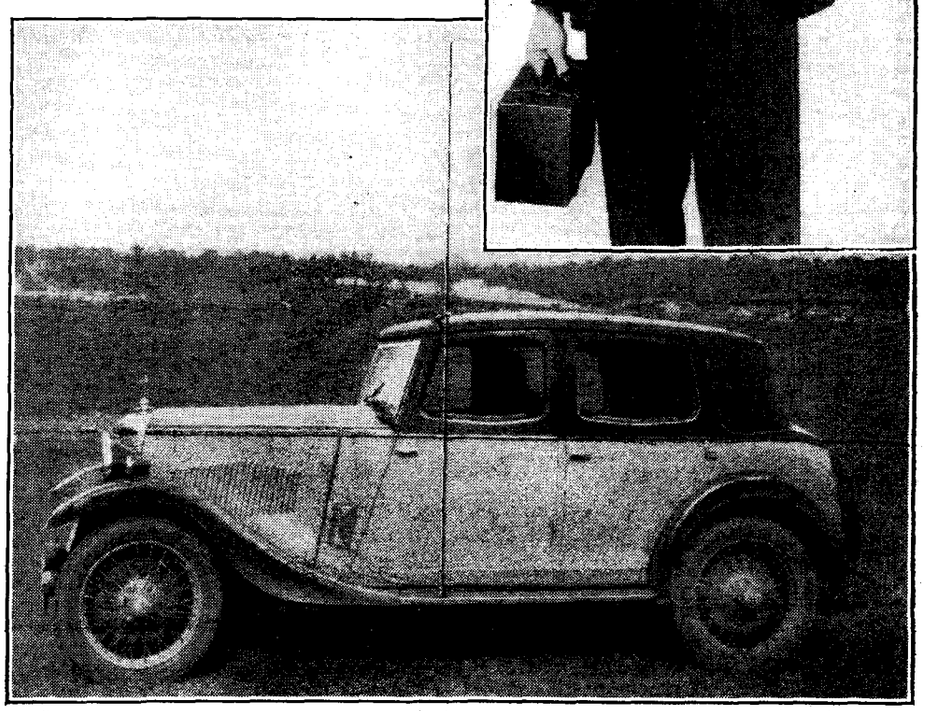

A 7ft. vertical copper rod serves as transmitting and receiving aerial for a car installation. A multiple cable connects the "transceiver" unit to the battery box.

A combined transmitter and receiver of extreme compactness, operating on about 5 metres, has been developed by the Ideal Radio and Gramophone Co., Ltd., of 444, Ewell Road, Surbiton, Surrey, and was recently demonstrated to *The Wireless World* in one of the forms in which it is shortly to appear on the market.

The Hermes Transreceiver, as it is called, measures only 6in. by 4in. by 7in., and weighs 5 lb.; the supplementary battery box brings up the total weight to under 15 lb. A microphone and "rod" aerial completes the equipment.

During the demonstration satisfactory two-way communication was maintained without any hitch between two moving cars and between an aeroplane flying over Brooklands, Leatherhead, and the surrounding country, and the Brooklands Control Tower. No interference suppressors were fitted to either car or aeroplane engines, but background noises were never serious enough to prejudice intelligibility. Although the tests were limited to distances of between 5 and 10 miles, this clearly did not represent the extreme limit of range, and it is understood that communication has been carried out up to 45 miles.

By means of switching, a single valve is made to carry out the combined functions of transmitting oscillator and receiving detector. The anode power consumption is rated as 1 watt, and, of course, reception is by means of headphones.

An idea as to the versatility of the apparatus and of the various uses to which it may be put will be gathered from the fact that, after attaching a short di-pole aerial directly to the set (for which purpose wing-nuts are provided), two-way conversation was carried out between a demonstrator walking round the aerodrome and another set installed in the Flying Club buildings.

Mr. E. H. Shaughnessy, late Assistant Chief Engineer of the G.P.O., and a well-known figure in both amateur and professional wireless circles, is associated with the company producing the Hermes sets.

Car radio relieves the tedium of driving through 30-m.p.h. limits.

Car Radio Performance

What to Expect : Some Fallacies Dispelled

IN this country car radio is still a new thing, and even amongst wireless enthusiasts there are comparatively few who have actual first-hand experience of its working. But special car sets have been in existence quite long enough for many popular misconceptions to have arisen with regard to the standard of performance that can normally be expected, to the effect on the electrical equipment of the car, and to the supposed difficulties of installation.

It seems, therefore, that a practical investigation of the subject from these points of view would be of general interest. The writer was fortunate enough to obtain from The City Accumulator Company the loan of a car fitted with the latest C.A.C. "Austin" receiver; he was given a free hand and ample time not only to test the set under normal conditions, but to look for trouble in circumstances that would seldom be encountered in normal use.

As the "Austin" set has already been described in detail, it is only necessary to say here that it is a five-valve superhet., the heaters being fed directly from the car battery, while anode current is "stepped up" from the same source through a rotary converter.

In the matter of range, the fairest comparison that can be made is with a standard domestic four-valve superhet. As can reasonably be anticipated, the extra valve of the car set, in the form of a signal-frequency HF amplifier, almost—but not quite—compensates for the inevitable ineffectiveness of the running-board aerial as compared with a normal outside aerial. A dozen good programmes, including the more popular Continental ones, can be depended upon in daylight, and, thanks to proper provision for long-wave reception, Droitwich should be receivable in any part of the country. This should apply broadly to any comparable superhet of good design.

As the car was an ordinary "family" model of medium price, a particularly useful opinion could be formed as to the capabilities of the average electrical equipment to supply the necessary energy (amounting to about 50 watts) for the receiver. The battery and dynamo were exactly as fitted by the makers, and there were no signs that they were being overworked. In some cases, however, alterations would be desirable, and it is pleasant to record that the makers of car electrical equipment seem to adopt a really helpful attitude, being prepared both to give advice and to make modifications where necessary.

No exceptional precautions were taken to prevent interference from the ignition system, etc.; the suppressors were of standard type, with the sole addition of electrical bonding between the engine (mounted on rubber) and the chassis. These simple precautions were effective, as no sign of interference could be heard when listening to worth-while stations, except for a few seconds while passing under bridges or through severe local screening.

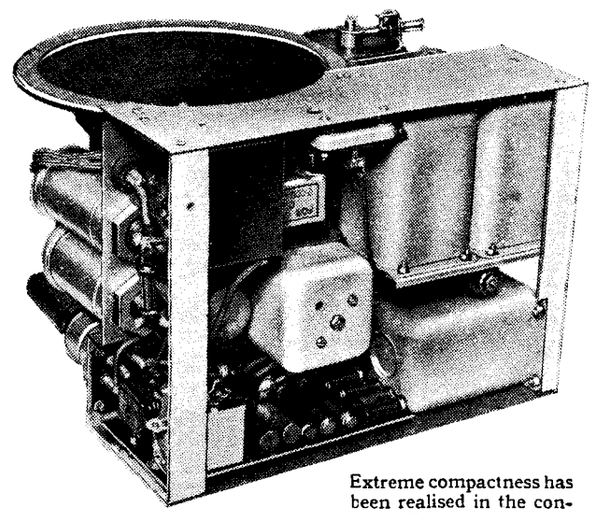

Extreme compactness has been realised in the construction of the car set. (C.A.C. "Austin.")

The bogy of interference from external sources may be summarily dismissed as of no practical account. True, occasional traces of it could be detected by listening carefully when passing a labouring lorry, along tram-lines, or past a neon sign, but the only disturbance—and that not of a serious character—that persisted for any length of time emanated from a 132,000-volt line running parallel with the road.

Car radio as a source of entertainment has taken on a new significance since the 30-mile limits were imposed. Our driver, either exceptionally Belisha-conscious or more probably soothed by a good afternoon programme, seemed positively to enjoy the long run out into the country through London suburbs at a speed well within the legal limit.

On reaching the open road speeds up to 60 miles an hour seemed no barrier to the appreciation of programmes; there was ample volume in reserve. H. F. S.

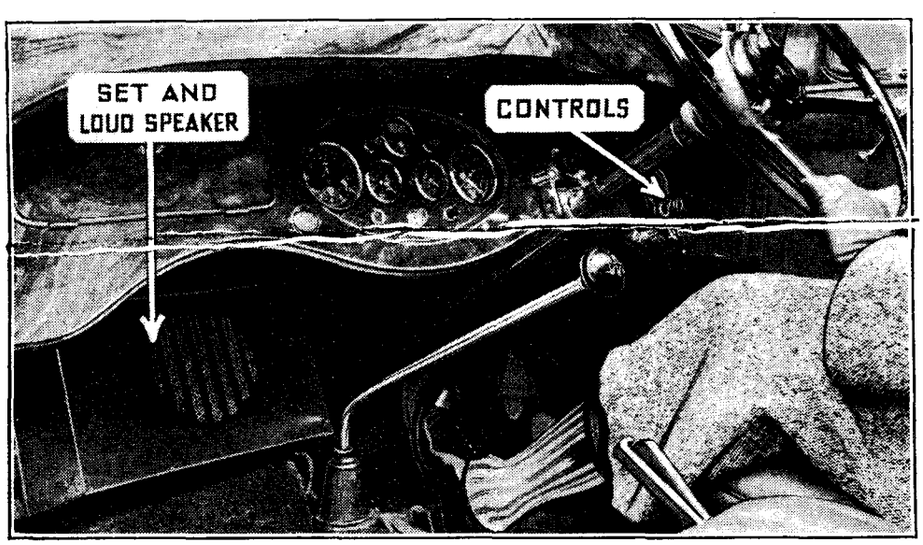

Installation of a single-unit set with remote control of the type illustrated above.

New Apparatus Reviewed

Recent Products of the Manufacturers

TONE COMPENSATING CHOKE

A SPECIMEN tone compensating volume control choke made to the specification given in *The Wireless World* of February 15th last has been sent in for test by Wright and Weaire, Ltd., 740, High Road, Tottenham, London, N.17. It is wound on an ebonite former 1¼in. square and small soldering tags are fitted on one cheek to which the ends of the winding are anchored.

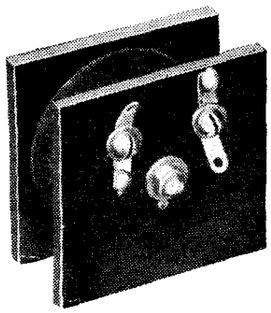

Wearite tone compensating volume control choke made to "Wireless World" specifications.

Its measured resistance is 77 ohms and the inductance 0.049 henry, which is sufficiently close to the theoretical value of 0.05 henry for all practical purposes. The price of this is 5s. 6d.

SAVAGE COMPONENTS

For High Efficiency Push-pull Output Stage

A COMPLETE set of transformers and chokes for the high efficiency push-pull output stage described in *The Wireless World* dated March 15th last, and which embodied the PX25A type valves, can now be obtained from W. Bryan Savage, Ltd., 56A, Clerkenwell Road, London, E.C.1. With the exception of the smoothing choke in the grid bias supply unit all the components have been designed and built specially for use in this unit.

The mains transformer has the type number LL/MT, and gives 500-0-500 volts with a nominal rating of 120 mA., but the windings are chosen to cope with the momentary demands of 240 mA. or so of the amplifier. It has three separate LT windings, one 4 volts at 5 amps. for the two rectifying valves, and two 4-volt 2-amp. windings for the PX25A valves.

The DC resistance of the HT secondary is 57 ohms for each half. The two smoothing chokes for the main power unit are listed as type LL/L3 and LL/L4 respectively, and they are used in this order, the first mentioned immediately following the rectifiers. Their resistances are 42 ohms in the one case and 50 ohms in the other. Assembled as a supply unit using two Osram MU14 rectifiers and two 4-mfd. smoothing condensers, but without the customary reservoir condenser, the measured DC output was 428 volts at 100 mA., 410 volts at 150 mA., 395 volts at 200 mA., and 384 volts at 240 mA. The regulation is, therefore, entirely satisfactory and well within the permissible limits of variation.

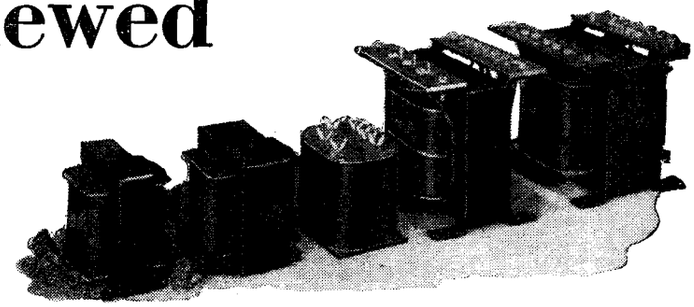

Selection of Savage components for high efficiency output stage, comprising mains transformer, intervalve and output transformers and chokes.

The AC output from the HT secondary winding varied by 12 volts only throughout this range of current loads, giving a regulation of 2.4 per cent.; an exceedingly good performance for a transformer of such reasonable dimensions. The transformer costs 55s. and the chokes 17s. and 20s. each for the LL/L3 and LL/L4 respectively.

The grid bias mains transformer carries, in addition to its HT and rectifier windings, a 4-volt 2-3 amp. LT winding for the early valves in the amplifier, and its price is 20s., the type number being LL/GB. A CC/40 smoothing choke for this unit costs 11s. 6d.

The intervalve transformer, LL/T1, has two separate secondary windings and costs 27s. 6d., while the special output transformer which is wound on a generous size iron core and has a tapped secondary winding to suit 6-, 12-, and 24-ohm impedance loud speakers and giving the correct working primary impedance, costs 45s. It can be wound for special output impedances at an extra charge of 5s. This transformer has a very low DC resistance, each half of the primary measuring 17.8 ohms only.

AVO TESTING ACCESSORIES

THE Automatic Coil Winder and Electrical Equipment Co., Ltd., Winder House, Douglas Street, London, S.W.1, has introduced a kit of useful accessories for testing apparatus. Whilst primarily intended for use with the Avometer, the Avominor, and other Avo instruments, the accessories are applicable to any type of meter or combined instrument which is used in the servicing and testing of receivers.

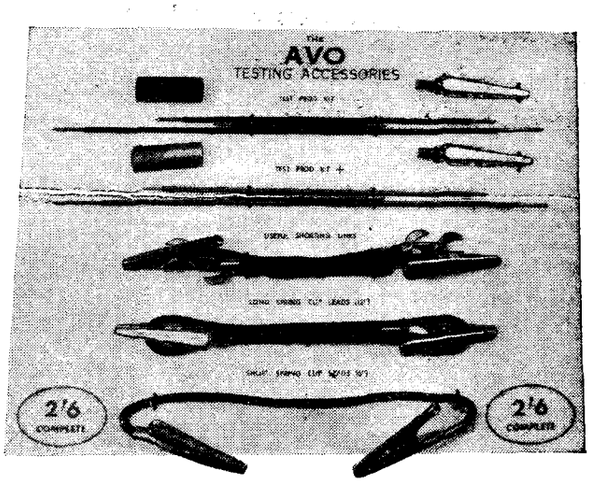

Spring clips, double-ended connecting leads and insulated prods comprising the Avo kit of testing accessories.

The kit comprises two flexible leads fitted with spring clips at each end; one is 12in. and the other 6in. long. There is a pair of leads having a spring clip one end and a small spade terminal the other, a pair of spring clips and two insulated holders fitted with spring chucks to take the wire prods supplied. These can be used when taking measurements in a set where the points of contact are not very accessible, and a long thin but stiff insulated connector is needed. There are three sizes in the kit varying in length from 7in. to 2½in., and each pair has red and black insulated sleeves. This handy kit costs 2s. 6d.

MAGNUM SWITCHES

BURNE-JONES AND Co., Ltd., 296, Borough High Street, London, S.E.1, has introduced a new version of the Magnum multi-contact switch. This model is intended for use in short-wave and all-wave receivers, the contacts being widely spaced to ensure a low capacity between adjacent springs. In order to accommodate an adequate number of contacts, this new model is made longer than the earlier pattern, and has a stiffening bracket in the centre.

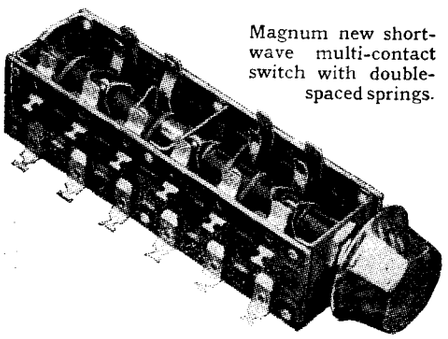

Magnum new short-wave multi-contact switch with double-spaced springs.

It is available fitted with either nickel-silver or gold-silver contacts in any number up to thirty-two pairs, and from two- to six-way. A nine-pair nickel-silver contact model costs 6s. 6d., and a similar pattern with gold-silver contacts 8s.

The switch is well made, and should stand up to hard wear without giving trouble through faulty connections, as the springs are quite robust; furthermore, the contact points have a slight self-cleaning action.

FOX AMPLIFIER

WE regret an error in the address of Fox Industries, Ltd., to whose products we referred in our April 5th issue. The address should have been given as 29, Dingley Place, City Road, London, E.C.1.

BROADCAST BREVITIES

By Our Special Correspondent

A Welsh Victory

THE atmosphere of caution in which the B.B.C. engineers live, move, and have their being, permeates the latest announcement concerning the possibility of a new station in the West.

One may take it that such a nebulous statement as: "It now seems that it may be practicable for a wavelength to be provided for a West Regional transmitter in the neighbourhood of Plymouth," coming from the engineers, is tantamount to a declared decision from any other quarter.

A Knock-out?

Last week a Welsh deputation visited Broadcasting House and emerged from the umpteenth sparring bout with Sir John Reith with considerably more success than on any previous occasion. It was significant that the engineers' "announcement" was issued the same evening.

Why We are Glad

Never has a country fought more tenaciously than Wales for its broadcasting rights, and no one will grudge the Principality a station of its very own. Indeed, for quite selfish reasons, many English-speaking listeners will be heartily glad not to have to listen to Welsh talks on the National wavelength.

Synchronisation the Secret

Actually, the Welsh owe their luck less to the good will of the B.B.C. (though the good will is there) than to the success of the wavelength-synchronisation system. It is because the engineers have collected data within the last few months on the results of synchronising the three medium-wave Nationals that they are emboldened to launch out with a new station.

All-Welsh from Somerset

It is an anomaly that the Welsh station will not be in Wales, but will actually be our old friend, Washford Cross, devoted entirely to Welsh programmes. The erection of a Regional transmitter in Devon makes this possible.

To cater for the North of Wales, a relay station is to be established in the Bangor area. It remains to be seen whether the new South-Western station can be synchronised with the other Nationals, but, judging from recent experience, this should present no difficulty.

Mr. Appleton's Responsibility

The new arrangement places more responsibility on the shoulders of Mr. E. R. Appleton, who will be put in charge of both the West of England and the Welsh transmitters. Mr. Appleton, however, is one of the early stalwarts, very popular in the West, and the possessor of a fund of tact and good humour which has often been tested to the uttermost.

Probably no one in the B.B.C. has had more experience in keeping the peace between somewhat fiery neighbours.

Scrapbook of 1905

ALREADY the "Scrapbook" programmes have dealt with A.D. 1913, 1909, 1914, 1910, 1918, and 1921, and Leslie Baily, their sponsor, is in danger of running short of years. However, he has started preliminary work on a Scrapbook dealing with 1905, the year which saw the rapid decline of the Balfour Government, and was a memorable one for many other reasons, as Mr. Baily will show us in the near future.

A Difficult Task

An enormous amount of research work is involved in a programme of this type, and, in going back thirty years, Leslie Baily and Charles Brewer, the B.B.C. producer, have set themselves a difficult task.

30-Line Television

DAYLIGHT hours are too precious in the eyes of the B.B.C. to be wasted on 30-line television, hence the new schedule which substitutes a late night session on Mondays in place of the Saturday afternoon transmission, which terminates to-morrow.

The majority of television amateurs may welcome the change, but there must be a good many daytime experimenters in high-definition work who will sadly miss the Saturday opportunity.

Substitute for High Definition

Many televiewers with cathode-ray gear make use of the 30-line tests in the absence of anything better, for high-definition signals are not easy to come by. Firms experimenting in this direction neither observe a regular schedule nor betray the least anxiety to acquaint the outside world when their transmitters are starting up.

Marionettes for 30-Line Television?

No tears will be shed over the B.B.C's tendency to repeat the Monday television programmes on Wednesdays. Whilst admiring Mr. Robb's splendid work as Britain's pioneer television producer, one cannot resist the feeling that many of the first-class turns are wasting their sweetness on the desert air.

Some of these artists are of international repute, and their services would help to raise the wilting standard of the normal broadcast programmes. Marionettes or old films should be adequate for 30-line television.

Detectives on the Short Waves

MY short-wave set being out of action, I have been stirred to envy in running through the printed programmes for the Empire stations. There is a "Meet the Detective" series of talks by the leading writers of detective stories, including Anthony Wynn, Ernest Bramah, Anthony Berkeley, E. P. Punshon, and Leonard Gribble. During the present week the five Empire transmissions have been relaying a talk by Leslie Charteris, author of the "Simon Templar" books.

"I passed by Your Window"

Another Empire event was "Piccadilly Circus at Midnight," an eye-witness account of the centre of London's West End by the Marquess of Donegall, looking down from a Regent Street window at midnight on Friday, April 12-13. The talk went out in Transmission No. 5, but electrical recordings followed at appropriate times for the other zones.

Were *you* at Piccadilly that night?

New Form of Appeal?

A. J. ALAN, the king of story-tellers, comes to the microphone in the Regional programme on May 19th to make an appeal on behalf of the St. Marylebone Health Society, 14, Salisbury Street, N.W.8. It is possible that the brilliant *raconteur* will clothe his appeal in the form of a short story.

NIAGARA was a distinguished guest in a recent American network programme. Instead of relying on "effects," engineers actually went to the spot, picking up the sounds as shown and relaying them by short cable to the Niagara telegraph office.

Readers' Problems

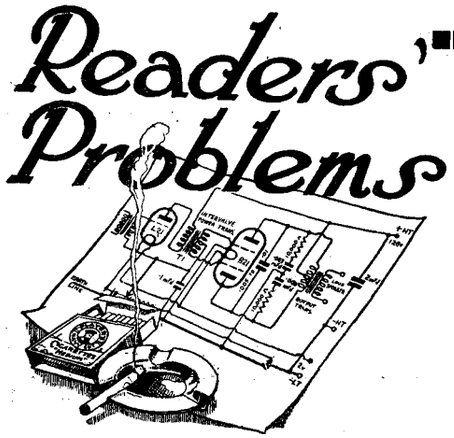

THESE columns are reserved for the publication of matter of general interest arising out of problems submitted by our readers
Readers requiring an individual reply to their technical questions by post are referred to "The Wireless World" Information Bureau, of which brief particulars, with the fee charged, are to be found at the foot of this page.

No Extravagance

WRITING in connection with a proposed remote-control system for his receiver, a reader asks whether it is permissible to leave the primary winding of a bell transformer (from the secondary of which a 5-volt AC output is to be obtained) permanently connected across the household supply mains.

There is no objection to this plan and, indeed, it represents the usual practice. So long as no current is drawn from the secondary of the transformer, the amount of energy dissipated in the primary will be negligible.

Tuning Meter

IN the QA Receiver there is no valve in the anode circuit of which a sufficiently great change of current takes place for operation of a tuning indicator. Indeed, it may be said that this receiver does not stand in need of such an indicator, as tuning is easy and not particularly critical.

However, it is possible to obtain visual indication of the correct adjustment of the high-frequency circuits, but we fear that a reader who wishes to fit a tuning meter must be prepared to face an appreciably higher expenditure than usual. The most practical solution of his problem is to connect a microammeter in series with the diode circuit in the manner indicated in Fig. 1.

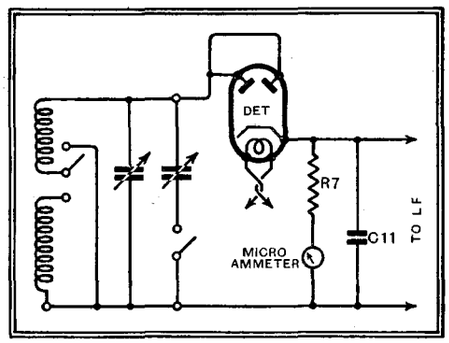

Fig. 1.—A visual tuning indicator showing changes in rectified signal current.

Prolonged Overload

A CORRESPONDENT who has been using the HT supply of his AC receiver for experimental purposes, requiring only one or two milliamperes of current, enquires whether this procedure is likely to result in damage to the apparatus.

The operation of rectifying equipment of the usual type in this way is hardly to be recommended except, perhaps, in emergencies or with the addition of an artificial load. Unless the equipment was designed on very liberal lines, it is quite possible that a condenser breakdown will occur as a result of the very considerable rise in voltage that must normally be taking place. It should be remembered that the circuits were originally designed for operation with a load sufficiently large to prevent this rise in voltage.

Confusing the Issue

A QUERIST who has just completed a receiver with true "quiet" AVC (controlled by a separate valve) is finding difficulty in making initial adjustments. His trouble is that he cannot receive any signal whatsoever, and thus, so to speak, has no material to work upon.

This correspondent lives at some considerable distance from the nearest broadcasting station, and as the various tuned circuits of his receiver are as yet in an "unganged" condition, it is quite understandable that no signals of sufficient intensity to release the silencing action of the "Q" valve should be received, or rather should pass through the HF and IF circuits. It is strongly advised that as a temporary measure the "quiet" part of the AVC system should be eliminated from the circuit. When this is done, no trouble should be experienced in finding a signal with which to make preliminary tests and adjustments.

Ageing Oscillator

AFTER working well for some time, the superheterodyne receiver constructed by a querist now fails entirely to operate on the medium band at wavelengths higher than about 400 metres. It is stated that the valves in use are those originally obtained for the set and it is asked whether the trouble is likely to be due to failing emission.

It is reasonable to suppose that, in the circumstances described, the defect is due to incipient failure of the frequency-changer valve. Our correspondent's best course would probably be to replace this valve, but its life might be prolonged a little by increasing the voltage applied to the oscillator anode or by tightening reaction coupling.

The Wireless World INFORMATION BUREAU

THE service is intended primarily for readers meeting with difficulties in connection with receivers described in *The Wireless World*, or those of commercial design which from time to time are reviewed in the pages of *The Wireless World*. Every endeavour will be made to deal with queries on all wireless matters, provided that they are of such a nature that they can be dealt with satisfactorily in a letter.

Communications should be by letter to *The Wireless World* Information Bureau, Dorset House, Stamford Street, London, S.E.1, and must be accompanied by a remittance of 5s. to cover the cost of the service.

Personal interviews are not given by the technical staff, nor can technical enquiries be dealt with by telephone.

Screened Downleads

A CORRESPONDENT who is attracted by the possibilities of reducing interference from a nearby tramway system by fitting a screened aerial downlead seems nevertheless to imagine that any benefits he may gain by this addition must inevitably be offset, to some extent, by a falling-off in receiver performance in several other directions.

Actually, there is no valid reason for anticipating that the performance of the set will be noticeably affected in regard to anything but its sensitivity. Selectivity and quality of reproduction should be unaffected. Provided that a matched transmission line is used—and this will probably be necessary as the aerial is to be moved to a considerable distance from the receiver, the average loss of signal strength is unlikely to be serious, especially as the receiver in use has a good reserve of sensitivity.

Balancing a Frame

A CORRESPONDENT who has been carrying out some tentative experiments with frame aerial reception has found that there is no definitely perceptible orientation of the frame corresponding to minimum signal strength. This he rightly assumes to be due to the fact that the frame is picking up a certain amount of energy through its action as an ordinary aerial. We are asked to give a diagram of a centre-tapped frame aerial circuit which will help towards overcoming this difficulty.

A simple method of connection is shown in Fig. 2. By setting the small balancing condenser C experimentally to a value corresponding to the grid-filament capacity of the HF valve, the input circuit will be made symmetrical and signal voltages picked up by the frame in the manner of an open aerial will be balanced out.

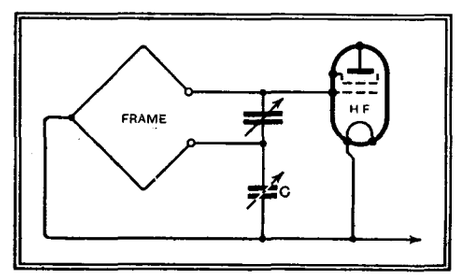

Fig. 2.—A balanced input circuit for directional reception.

Latest Single-span Filter

THE aerial filter of the Olympic S-S Six is an improvement over the corresponding input circuits specified for earlier Single-Span receivers and, as previously stated in these columns, it may, with advantage, be employed with any set of the Single-Span type. For the benefit of a reader who asks whether it would be worth while to fit the latest filter to his new Single-Span Battery Four and for information as to how the AVC leads should be connected to the filter, it may be stated that the proposed alteration is to be recommended; the resistance R3 in the receiver will be omitted and the GB terminal on the filter will be connected directly to the AVC line.

The Wireless World
THE PRACTICAL RADIO JOURNAL
25th Year of Publication

No. 817. FRIDAY, APRIL 26TH, 1935. VOL. XXXVI. No. 17.

Proprietors : ILIFFE & SONS LTD.

Editor :
HUGH S. POCOCK.

Editorial,
Advertising and Publishing Offices :
DORSET HOUSE, STAMFORD STREET,
LONDON, S.E.1.

Telephone : Hop. 3333 (50 lines).
Telegrams : "Ethaworld, Watloo, London."

COVENTRY : Hertford Street.
Telegrams : "Autocar, Coventry." Telephone : 5210 Coventry.

BIRMINGHAM :
Guildhall Buildings, Navigation Street, 2.
Telegrams : "Autopress, Birmingham." Telephone : 2971 Midland (4 lines).

MANCHESTER : 260, Deansgate, 3.
Telegrams : "Iliffe, Manchester." Telephone : Blackfriars 4412 (4 lines).

GLASGOW : 26B, Renfield Street, C.2.
Telegrams : "Iliffe, Glasgow." Telephone : Central 4857.

PUBLISHED WEEKLY. ENTERED AS SECOND CLASS MATTER AT NEW YORK, N.Y.

Subscription Rates :
Home, £1 1s. 8d. ; Canada, £1 1s. 8d. ; other countries, £1 3s. 10d. per annum.

As many of the circuits and apparatus described in these pages are covered by patents, readers are advised, before making use of them, to satisfy themselves that they would not be infringing patents.

CONTENTS

	Page
Editorial Comment	407
A B.B.C. Dramatic Control Unit	408
Current Topics	413
A Permanent Magnet Industry	414
LF Amplification in Television Receivers	417
Hints and Tips	419
Radio Data Charts—III	421
Listeners' Guide for the Week	422
Unbiased	424
Ferranti AC/DC Universal Receiver	425
Broadcast Brevities	427
Foundations of Wireless—XIX	428
Letters to the Editor	430
Random Radiations	431
New Apparatus Reviewed	432

EDITORIAL COMMENT

Broadcast Station Names

Lack of Spelling Uniformity

THE identification of broadcasting stations has always been something of a problem for the listener. Unless a station is very well known, or has a distinctive call or interval signal, it is often very difficult to be sure of its identity and this difficulty increases with the lesser-known transmitters.

But even when one has been successful in identifying a station, its geographical location may still be a matter of doubt, for the reason that so many broadcasting stations are known by names which have little relation to their locations, or the pronunciation of the name in its native form differs so much from the spelling by which we should identify it in an atlas or a gazetteer that it is often almost impossible to associate the two.

"Diallist," writing in this issue, draws attention to the lack of uniformity in names of broadcasting stations given in published lists, and pleads for the adoption in such lists of the English place names rather than the foreign ones, suggesting that Rome in English lists should always be Rome and not Roma and, similarly, Munich instead of München, Gothenburg instead of Göteberg, and so forth.

Phonetic Spelling

Whilst we are fully in agreement that uniformity in a matter of this kind is very desirable, we are not quite satisfied that the adoption of English names throughout might not merely add to the confusion. The published lists of broadcasting stations are obviously intended for the convenience of those who listen in, and they would naturally be helped in the matter of station identification if the lists had some relation to the station names as announced by the stations themselves. There is, therefore, a good deal to be said for the adoption in lists printed in this country of the station name phonetically spelt as it is broadcast in its own language.

It would seem possible, that in process of time, and as a direct result of the constant advertising of station names by broadcasting, that we shall adopt for our maps phonetic spelling of place names, corresponding with the broadcast pronunciation in the language of each individual country. The spoken word through broadcasting is such an influence today that the generation now at school may be more ready to adopt Roma, Napoli, Milano, than Rome, Naples, Milan, more familiar to an older generation.

Sound and Vision

Need for a New Control

WITH the addition of vision to the broadcast programme, a new problem of control will present itself.

With the very simple "sets" of the present experimental television broadcasts, it has been comparatively easy for the control engineer to adjust the sound intensity to suit the proximity of the televised subject, but even so it has happened on occasions that as a figure has moved away from the camera so the intensity of the voice has increased!

Inventors might turn their attention to the development of an automatic control which will ensure that the intensity of sound will vary as the distance of the source of sound from the camera, so that we may never have the "spectacle" of a lamb bleating in the distance and "sound" like an ass braying in our ear.

A B.B.C. Dramatic Control Unit

Problems of Combining Programmes from Different Sources

By C. H. COLBORN, B.Sc., A.M.I.E.E., and J. A. G. MITCHELL,

(Designs Section, The British Broadcasting Corporation)

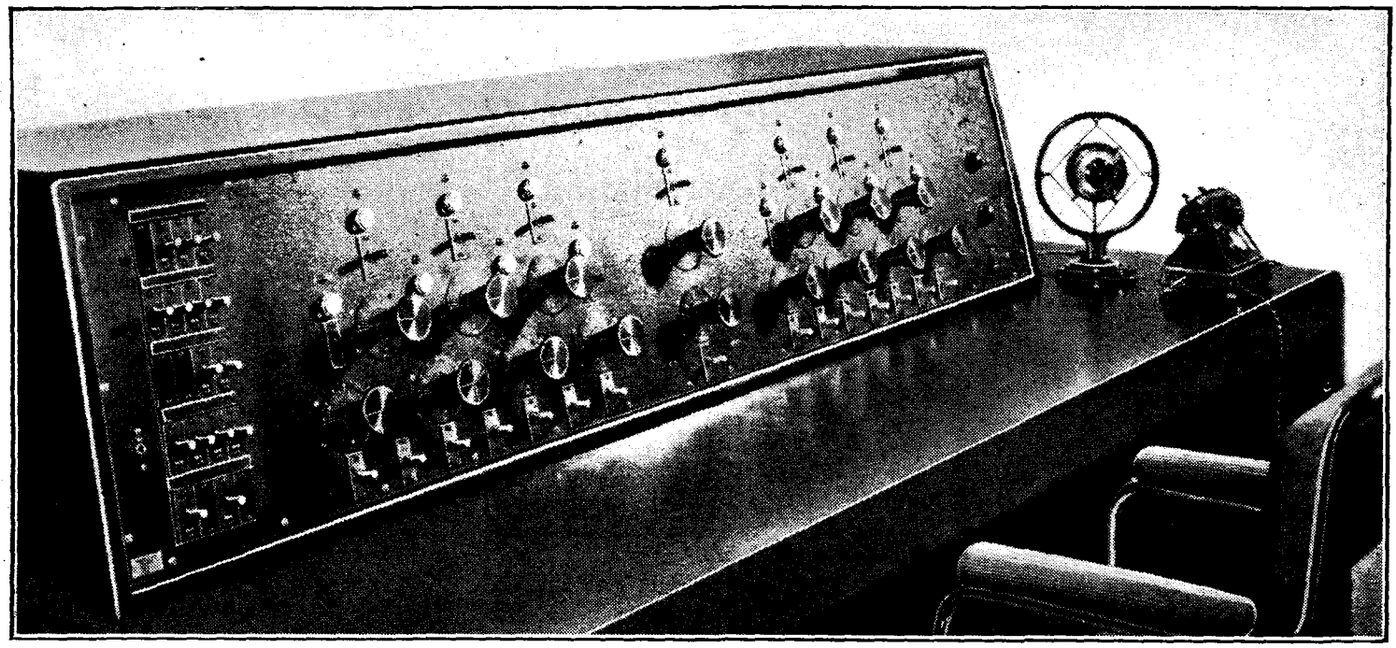

General view of the latest dramatic control unit. The panel is seven feet long.

LISTENERS have no doubt often appreciated the skill with which the component parts of a multiple broadcast such as "Empire Exchange" are blended smoothly together. The success of transmissions of this character depends to a considerable extent on the centralisation of controls and the provision of systems of relays to prevent errors of cross-connection.

THE design of a dramatic control unit, such as that recently installed in Broadcasting House, provides an interesting combination of ordinary electrical speech-input problems with those arising from the peculiar characteristics of broadcast play-producing technique.

The object of a dramatic control unit is to enable a programme to be produced which, by its very nature, requires a number of studios or other sources to be combined together. Such programmes are usually plays or musical productions, but also include programmes which are produced for special occasions, such as Christmas Day, New Year's Eve, etc. The first requirement of such a unit, therefore, is that the operator shall be able to combine at will the outputs from a number of separate studios (or other sources of programme). Experience has shown that the most convenient system for such combination is to arrange for each source to be separately controlled and for the sources to be grouped in such a manner that one source is combined with the output from a central mixer to which the other sources are connected. These latter sources are arranged in two groups, either group being capable of being faded out on the central mixer. The mixing arrangements required can be represented diagrammatically as in Fig. 1.

Cue Signalling

To secure satisfactory operation it is necessary to provide two-way cue signalling circuits between the operator and each source; and, further, the operator must be able to issue verbal instructions to the performers at the various sources. Another requirement is that the performers shall be able to hear the programme when they are not themselves performing.

In addition it is required that artificially produced echo may be added to the output from any source and that the relative amount of such echo shall be controlled by the operator.

On the basis of the foregoing requirements the two dramatic control units installed in Broadcasting House in 1932 were designed. When it became necessary to provide a third unit towards the end of 1934 it was decided to incorporate certain additional features as described below.

When a programme which is made up partly of items from England and partly of items from overseas is being broadcast there is a danger of a howl if any Dominion whose programme is being radiated from England should take the English programme and combine it with their own programme. The circuit whereby this howl may be produced is illustrated in Fig. 2. To avoid the danger of this happening it was decided to provide automatic switching arrangements so that in such circumstances each overseas country is fed with the complete programme, excluding its own contribution.

For the production of plays it frequently happens that echo is required on as many as four separate sources. With the echo facilities provided with the two dramatic control units of 1932 this would require the use of four echo rooms, and as the number of such rooms at Broadcasting House is limited to five this seriously restricts the use of echo. For example, if a dramatic control rehearsal or transmission requiring four echo rooms

The B.B.C. Dramatic Control Unit—

is in progress this leaves only one echo room for ordinary programme requirements and for a second dramatic control production which may be in progress at the same time. It was therefore decided that in the new unit the echo facilities should be such as to reduce the number of echo rooms required.

The methods by which the foregoing requirements have been met in the unit recently installed are as follows:—

A total of fifteen input channels were required, seven arranged on each side of a central mixer with the fifteenth as an independent channel.

The arrangement of the mixing circuits is shown in Fig. 3. The incoming channels are all fed from amplifiers having output impedances of 300 ohms. It will be seen that there is a simple type of potentiometer for each input channel. Each potentiometer has a total resistance of 600 ohms (which is the normal output load for the amplifiers) and is arranged in 25 steps. The 10,000 ohm series resistances included after each potentiometer are to prevent the level obtained from any one channel from being appreciably affected by the fading up or down of the other channels. Thus, if Channel 1 only is faded up it works through 10,000 ohms into a resistance made up of seven resistances of 10,000 ohms in parallel (1,428 ohms), and if Channels 2-7 are then faded up Channel 1 works through 10,000 ohms into six resistances of 10,200 and one of 10,000 ohms, all in parallel (1,450 ohms). The level obtained from Channel 1 thus remains practically unaffected.

A similar result could be obtained by the use of a constant impedance potentiometer for each channel. Whatever system is used to avoid a change of level on one channel when others are faded up or down, it will of necessity introduce a constant loss in each channel (unless, of course, each channel potentiometer were fed directly to a valve, but this would be an expensive arrangement).

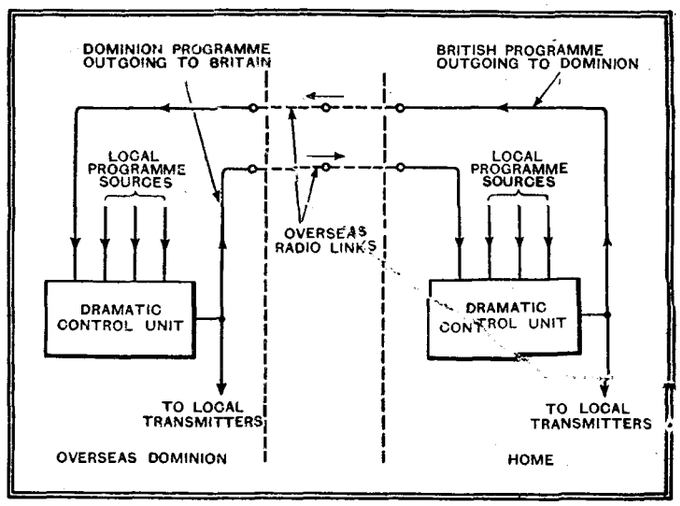

Fig. 2.—Circuit arrangements which may produce a howl if the overseas station attempts to take part of the home programme while the latter includes part of the overseas transmission.

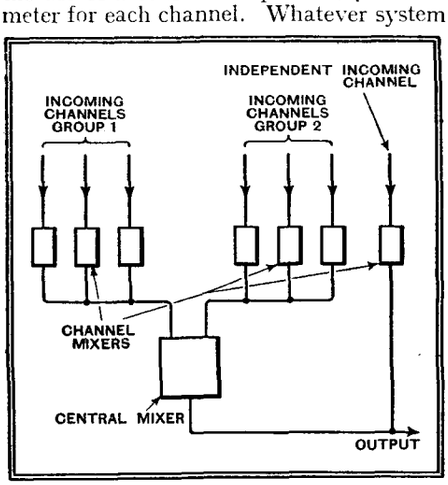

Fig. 1.—Mixing arrangements required for a dramatic control unit.

The particular system of Fig. 3 was chosen because the potentiometers could be of the single-arm type. In any unit of this kind the potentiometers are, of course, by far the weakest link in the chain, and it is desirable to reduce the number of moving contacts to a minimum.

Central Mixer

The operation of the central mixer is shown in Fig. 3. It will be seen that in the mid-position of travel both groups are at full volume, and that as the mixer is moved to an extreme position one group is faded out while the other remains at full volume.

In order to combine the two outputs from the central mixer and the fifteenth channel an amplifier having three separate inputs in provided. In the two units previously constructed the amplifier was housed with the unit itself, but this is not a very convenient arrangement from a maintenance point of view, and in the case of the present unit the amplifier is located in the control room, while the dramatic control room, in which the unit is installed, is some distance away. The circuit of the amplifier is shown in Fig. 4. It will be seen from Figs. 3 and 4 that for the circuits from the central mixer to Inputs 1 and 2, transformers are provided at each end of the line as the sending impedance from the mixer is too high in certain circumstances for direct connection to a line. In the case of the fifteenth channel a resistance of 1,428 ohms is shunted across the circuit after the 10,000 ohm series resistance in order to introduce the same loss in this channel as is introduced into the other channels by virtue of their combination. Thus the sending impedance from the fifteenth channel is only 1,250 ohms and transformers are not necessary between this channel and Input 3 of the amplifier.

The outputs from the three valves associated with Inputs 1, 2 and 3 are combined through a fourth valve. This combination is effected *via* a 25,000 ohm resistance in each case, so that each valve (impedance 15,000 ohms) may work into a reasonable output impedance. The amplifying valves are chosen so that the overall gain of the amplifier from any input to the output is equal to the constant loss introduced into the channels. Thus, when any channel is turned up to full volume and the central mixer is at maximum for the appropriate group, the level at Output 1 of the amplifier is the same as the level incoming to the channel. Thus, the amplifier just compensates for the loss inherent in the mixing system.

Auxiliary Switching

From Fig. 4 it will be observed that the amplifier has a second output, which is supplied from the common point preceding the last stage. The two separate outputs are necessary for the purpose of auxiliary switching, the function of which will now be described.

In order to meet the condition outlined in the introductory paragraphs for dealing with a programme made up of English and Dominion items by supplying the complete programme to each Dominion excluding its own contribution, a system of relay switching was included in the dramatic control unit and an additional amplifier provided. The switching arrangements are shown in Fig. 5 for the

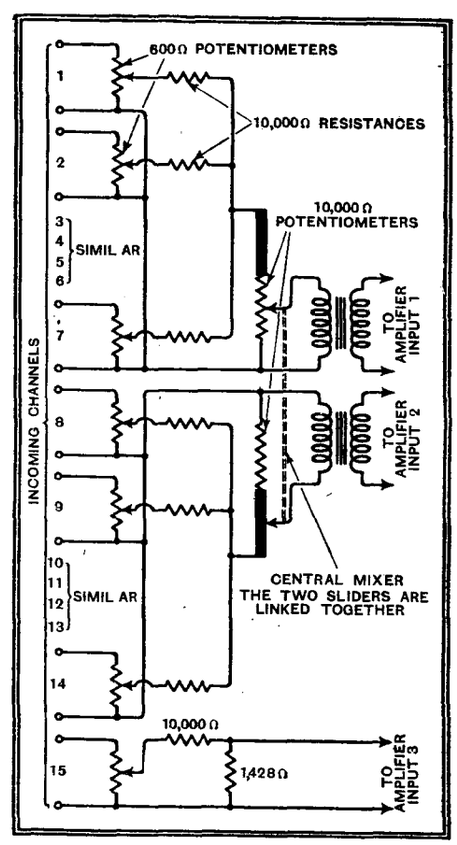

Fig. 3.—General arrangement of mixing circuits.

The B.B.C. Dramatic Control Unit—

case of one incoming channel only. It will be seen that the connection from the 10,000 ohm series resistance to the central mixer is now taken *via* a relay contact so that when the relay operates the series resistance is disconnected from the central mixer and connected to Input 1 of amplifier No. 2. This amplifier has two inputs each feeding into a valve, and the outputs from the two valves are combined into a third valve as in the case of No. 1 amplifier already described. The second output from No. 1 amplifier is connected to Input 2 of No. 2 amplifier, *via* an attenuating network such that the levels applied to Inputs Nos. 1 and 2 are normally about equal. Thus the programme available at Output 1 of No. 2 amplifier will be the combination of everything applied to the inputs of both amplifiers, whereas the programme available at Output 1 of No. 1 amplifier will be the full combination less any channels that have been diverted to Input 1 of No. 2 amplifier. Two separate controlling amplifiers are used following the dramatic control amplifiers, Nos. 1 and 2 controlling amplifiers being connected to the No. 1 outputs of Nos. 1 and 2 dramatic control amplifiers respectively. From Fig. 5 it will be observed that as the home transmitters are fed from controlling amplifier No. 2 they will always receive the full programme, whilst the outgoing line to the overseas radio link to a Dominion, being fed from either of the controlling amplifiers according to the operation of a relay, may receive the full programme or the full programme less one or more incoming channels. The relay switching arrangements are such that if an incoming channel is used for a programme from a Dominion this channel will be automatically transferred to Input 1 of No. 2 amplifier whenever the volume is turned up, and at the same time the outgoing amplifier for this particular Dominion will be transferred to controlling Amplifier No. 1. Thus the Dominion will receive the full programme as supplied to home transmitters except during the periods when the volume of its own programme is turned up on the dramatic control panel; during these periods it will receive the full programme less that supplied by itself.

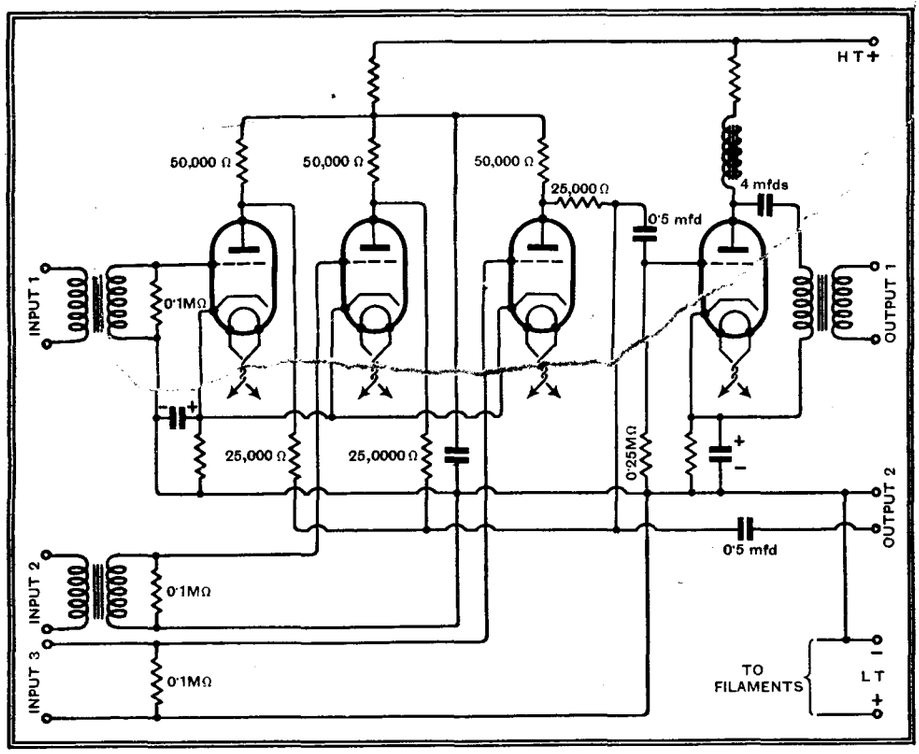

Fig. 4.—Circuit diagram of dramatic control amplifier.

Level Compensation

The relay switching provided enables any four of the fifteen channels to be treated in the above manner for any one programme. By means of a switching operation in the control room is it possible to associate the winding of any one of the four output change-over relays with that of any one of the fifteen channel change-over relays, so that the two relays operate together when the volume in this particular channel is turned up. If the four channels so allocated were all on one side of the central mixer and were all turned up simultaneously this would cause an increase in level to be obtained from the remaining three channels of the group, since the four channels no longer act as a shunt across the others. The increase in level would be 6 db. for each of the three channels. This increase would be audible and in order to avoid it a compensating resistance of 10,000 ohms is associated with each channel so that when the channel is diverted to Amplifier No. 2 the compensating resistance takes its place. Similarly when any channel returns from Amplifier No. 2 to Amplifier No. 1 it automatically puts its compensating resistance across the input of Amplifier No. 2.

The gain required between Input 1 and the output of No. 2 amplifier is greater than that required in the case of No. 1 amplifier since there is no central mixer associated with No. 2 amplifier, and therefore any channel diverted to this amplifier is shunted by fourteen compensating resistances or other channels, whereas when it is connected to No. 1 amplifier it is shunted by only six compensating resistances or other channels.

Echo Arrangements

The system adopted in previous dramatic control units for adding artificially-produced echo to any source is shown in Fig. 6. It will be seen that the amplifier which is connected to the source has two outputs, one of which is connected directly to one channel of the dramatic control unit and the other is connected to the echo room. The output from the echo room is connected to that channel of the dramatic control unit on

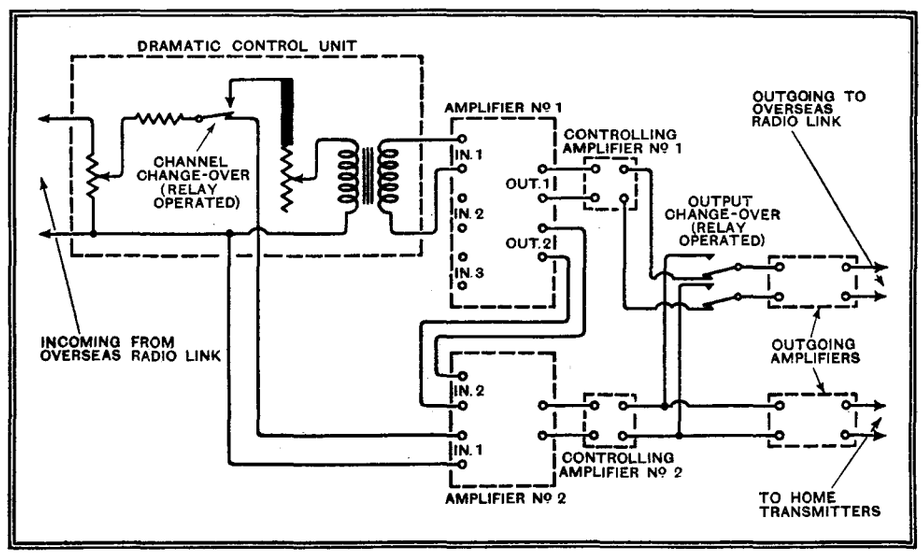

Fig. 5.—Circuit arrangements for auxiliary switching.

The B.B.C. Dramatic Control Unit—

which the echo for this particular source is required. Thus the relative strengths of the direct transmission from the source and its echo are determined by the fade potentiometers for these two channels. With such an arrangement if there are several sources each requiring a different degree of echo then it is necessary to use as many echo rooms as there are sources requiring echo.

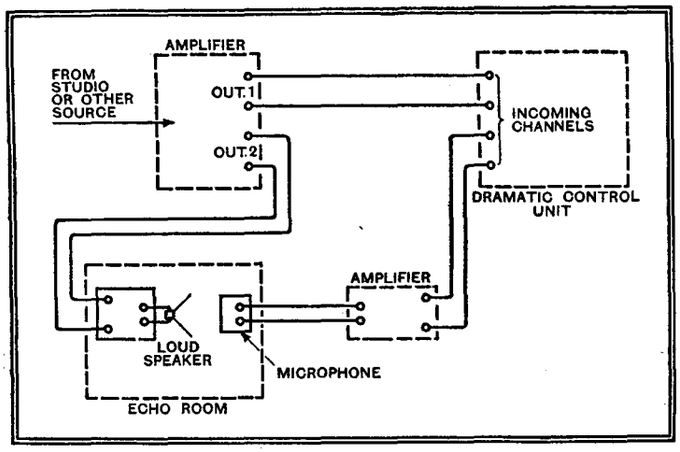

Fig. 6.—Echo arrangements—old system.

Two Echo Rooms

As already explained, it was desirable, when designing the new unit, to arrange the circuits so that the number of echo rooms required would be reduced to a minimum. The arrangements were therefore changed to those shown in Fig. 7. This shows the arrangement for one half of the dramatic control unit only (Channels 1 to 7); for the other half a precisely similar arrangement is provided. The feature of this system is that only two echo rooms are necessary, one associated with Channels 1 to 7 and the other with Channels 8 to 14. The diagram shows two sources connected to Channels 1 and 3, while echo for these two sources is controlled *via* Channels 2 and 4 respectively. It will be seen that the output side of the 10,000 ohm series resistance for each channel is taken to a change-over key. When this key is unoperated conditions are normal, but when it is operated the channel is connected *via* an echo amplifier to the echo room and the output from the echo room is taken back to the input of the central mixer. This change-over key is fitted for each channel in addition to the change-over relay fitted for auxiliary switching, as already described. Thus, with the channels connected as shown the amount of echo required for the programme from Amplifier A is controlled by Channel 2, and that required for Amplifier B is controlled by Channel 4. The important point to observe in this case is that the controlling channels for echo function prior to the echo room instead of after it as in the old system. Thus, where echo is required on two or more sources connected to Channels 1 to 7 the second outputs of these sources are mixed and the mixture passed to the echo room. The strength of any constituent of the echo mixture may be related to that of its direct source by means of the associated fade controls on the dramatic control unit. In order to avoid change of level on any channel due to other channels being diverted to the echo amplifier compensating resistances of 10,000 ohms are associated with each of the change-over keys in the same manner as previously described for auxiliary switching.

It will be realised that the number of echo rooms required could actually be reduced to one only, if the channels which were switched to echo were controlled by a separate central mixer, mechanically coupled to the main central mixer. In this case the combined output from such a second central mixer would be passed *via* an echo amplifier to the echo room, and the mixture returning from the echo room would be added to the main programme after the central mixer, exactly as the fifteenth channel is added.

In the case of the fifteenth channel the change-over key following the 10,000 ohm series resistance is replaced by a three-position key, so that when this channel is used for echo it may be connected either to Echo Amplifier No. 1 or Echo Amplifier No. 2, according to which group contains the direct source for which it is to provide the echo.

The echo arrangements described above are due to J. C. Taylor, of the B.B.C. engineering staff.

On the front panel of the dramatic control unit a cue key and lamp are provided adjacent to each mixer control handle. This key and lamp is automatically associated with the studio, which forms the source for its particular channel by means of the plug and jack connections which are necessary to connect up the unit before any programme can begin. In each studio a push button and cue lamp are provided, and thus the dramatic control operator may cue the studio and *vice versa*.

Loud speakers are provided in each studio in use for the production, and when any studio is faded out on the dramatic control unit a switch on the fade potentiometer causes the loud speaker in the corresponding studio to be supplied with the combined programme. A key is provided on the unit whereby the operator can connect the output of his microphone in the dramatic control room to all loud speakers so that he may give verbal instructions to the performers in all studios simultaneously during a rehearsal.

The illustration shows the completed unit on its table. The front panel is seven feet long, and the table on which the unit stands is ten feet long by three feet six inches wide. A sliding seat is provided to enable the operator to move readily from one end of the panel to the other.

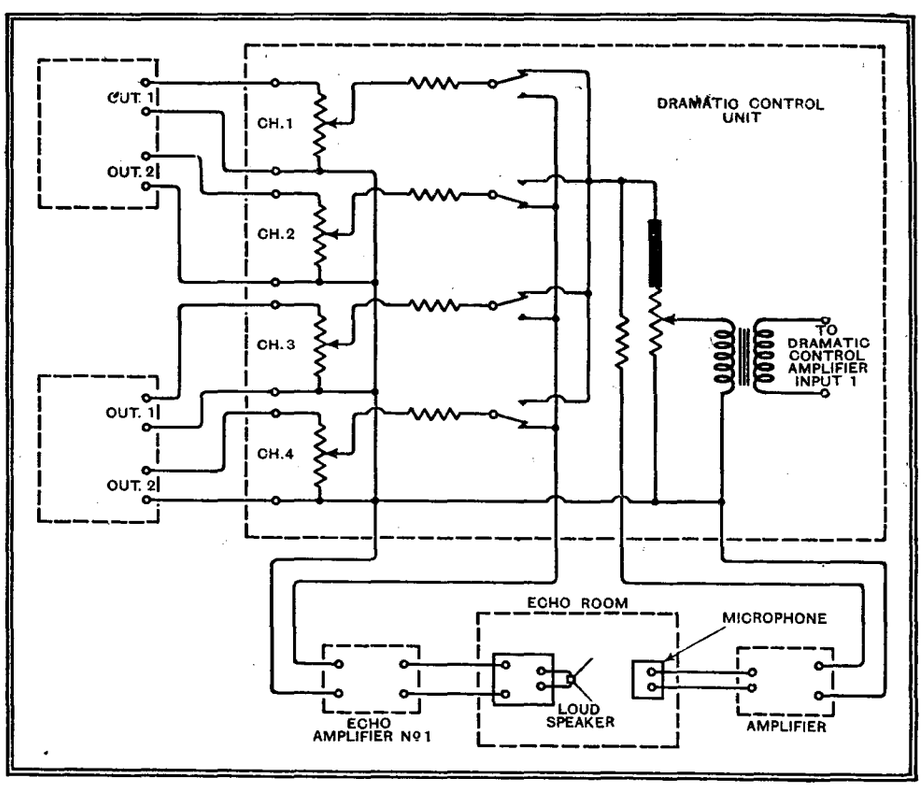

Fig. 7.—Echo arrangements in the latest system of dramatic control.

The unit which has been described represents an interesting stage in the evolution of dramatic control units. The first dramatic control unit to be used for

B.B.C. Dramatic Control Unit—

broadcasting purposes was conceived and designed by B. Honri, at that time a member of the B.B.C. engineering staff, and all succeeding units, including the latest one, have followed the general lines of his original scheme. Although there have been many additions and elaborations, such as mixing prior to the echo rooms, auxiliary switching, etc., the fundamental principles of one control potentiometer per incoming source, and a central mixer have remained. There cannot be much doubt, however, that the latest unit represents the final model of this type and that any attempt to design on the same principles another unit having more channels or more elaborations would result in the finished article being unwieldy and beyond the power of one man to control. If future units are required to deal with a programme constructed from more than fifteen separate sources, then some scheme will have to be adopted whereby the number of controls is limited and the controls automatically associate themselves with the sources required at any one time.

It is interesting to observe that, whereas in the early stages of its evolution the dramatic control unit required more and more channels to meet play-producing requirements, of recent years play-producing technique tends to require a lesser number of channels, and the latest expansion in the number (namely, from 11 to 15) was determined largely by programmes of the type of "Empire Exchange" produced on Christmas Day.

DISTANT RECEPTION NOTES

FOR this relief much thanks! The Eiffel Tower really has been working on 206 metres for some little time now to the great advantage and contentment of all concerned. Even Parisians, fond though they were of their oldest station, had found it a great nuisance, for with sets of the not too selective variety it was apt to interfere with reception of Radio-Paris and several foreign long-wave stations.

Radio-Normandie has gone to 269.5 metres and seems to be settling down fairly happily there. This station is now well received by daylight, though interference is often present from dusk onwards.

There is quite a crop of new stations almost ready to come into action. France alone has three which are already testing and may be undertaking part of the programme service by the time that you read these notes. These are the P.T.T. stations at Toulouse, Lyons and Lille, the first of which is rated at 200 kilowatts, the second at 90 and the third at 60. Just what wavelengths are going to be found for these giants I don't know, but no doubt they will be fitted in somewhere and somehow.

All should provide very good reception in this country, for the existing Radio-Toulouse with 60 kilowatts, Lyons-Doua with 15 and Lille P.T.T. with 5 are well received.

A fourth newcomer is the 150 kilowatt station at Bucharest which is to be known as Radio-Roumanie. Under the Lucerne Plan the 1,875-metre wavelength belongs to Rumania and Huizen has no channel on the long waves.

The Dutch station, even if the 50 kilowatt Koowijk plant is used at all times, will certainly be unable to make itself heard on the same wavelength as Bucharest's new station. It will have to find another wavelength, though what this will be is at present wrapt in mystery.

One only hopes that it will not be a case of open warfare once more on the long waves again just when everything seems to be settling down so well.

Synchronised Working.

Great strides have been made of late in the working of synchronised transmissions on the same wavelength. With their power reduced to 20 kilowatts all round the London, West and North Nationals each manage to serve areas of respectable size without mutual interference.

Another good example to which I have referred before is the German common wave-channel of 251 metres which contains four stations in addition to the 17-kilowatt Frankfort.

The B.B.C. is thinking of extending synchronised working in this country and I should not be surprised to see it more widely adopted in some others. It seems to offer the best solution of the difficult problem of fitting well over 200 stations into just over 100 available channels. One has not to do very much thinking to bring to mind many countries in which there are several stations that regularly transmit the same programmes. Since many of these stations are well separated geographically it would seem that synchronised working is by no means an impossibility.

Now that we have changed over to Summer Time Continental stations on the medium waves are at their best at a somewhat later hour during the evening. This, however, is no great drawback since so many of us make use of the longer hours of daylight to spend more time out of doors. On our return home after tennis or an evening walk there is plenty of entertainment awaiting us. D. EXER.

A NEW BOOK

Definitions and Formulæ for Students (Radio Engineering), by A. T. Starr, M.A., Ph.D., A.M.I.R.E. Pp. 35. Sir Isaac Pitman and Sons, Ltd., Parker Street, Kingsway, London, W.C.2. Price sixpence.

This is a handy little book divided into two sections, the first of which is a glossary of terms and expressions commonly used in radio engineering. Section II comprises a useful collection of formulæ and information relating to units, circuit constants and circuits (including valve circuits). The whole of the information is in concise form and should prove very useful to the student.

O. P.

ANOTHER 200-KILOWATT STATION

Polish Broadcasting Celebrates Its Tenth Birthday

By a Special Correspondent

Dr. Sig. Chamiec, the Director-General of Broadcasting in Poland.

FOR the past year Europe has possessed two stations of 200 or more kilowatts, viz., Luxembourg and Moscow. It can now be revealed that Polskie Radio is planning to celebrate its tenth anniversary by the installation of a 200-kilowatt station at Warsaw. The plans provide for several other high-power stations in different parts of the country and a new Warsaw No. 2 working on 20 kilowatts.

There will be two simultaneous transmissions: one a National programme from the 200 kilowatt station at Raszyn and a Regional programme on low power from Warsaw.

There will be as little delay as possible in the construction of the new South Western station, probably mid-way between Katowice and Cracow, a neighbourhood which is not at present adequately covered. The site for a Central Eastern station is expected to be at Pinsk.

Poland has at present no short-wave station except a miniature 0.35 kilowatt outfit at Posnan, but it is now known that Polskie Radio, which is 40 per cent. State-owned, is considering the development of short-wave broadcasting for the benefit of Polish Nationals in the United States, South America and other countries. If, however, funds do not permit of the construction of a Polish short-wave station, Germany may be asked to relay Polish programmes from Zeesen.

Recently Poland has seen a radio revival which has resulted in the employment of 12,000 people in the radio factories as compared with 7,000 a year ago. Hitherto, the country folk have taken little interest in broadcasting because of the expense involved. The licence fee for rural workers has now been reduced from 2s. 6d. a month to 10d. a month.

Poland's radio had its genesis in July, 1925, with an 0.5-kilowatt station at Warsaw and 700 listeners. Licensed listeners now number 420,000.

CURRENT TOPICS

Events of the Week in Brief Review

Italy's Listeners

REGISTERED listeners in Italy now number 430,000. At least 2,000 schools regularly receive educational broadcasts.

Paris Radio Show

THE Paris autumn radio show is to be held in the Grand Palais de l'Avenue des Champs Elysées from September 5th to the 15th next.

Three-quarter Million Increase

BRITISH wireless licences passed the seven million mark during March, the total number in force at the end of the month being 7,011,616, as compared with 6,259,653 at the end of March, 1934.

Radio and Decorum

THE critics of M. Laval, the French Foreign Minister, who contend that the installation of a wireless set in his office is a lapse from diplomatic decorum, must have exceptionally short memories.

None other than M. Doumergue, when President of the French Republic, had a real DX set in constant use at the Elysée.

Boys' Wireless League

ALDERMAN F. G. FOSTER, J.P., has accepted the Presidency of the Boys' Wireless League which has been formed in Portsmouth.

Already the League has had a good send-off, boys having flocked to join from all parts of the district. All correspondence should be addressed to the Hon. Secretary, Mr. L. Harrison, Boys' Wireless League Office, 20, Salem Street, Portsmouth.

Lectures on Television

AT the Polytechnic, Regent Street, London, W.1, a course of four lectures on television will be given by Mr. H. J. Barton Chapple, Wh.Sch., B.Sc., on Mondays, beginning on May 20th next, from 6.30 to 8 p.m. (There will be no lecture on June 10th.)

The course will cover image structure, methods of scanning, television receivers, photo-electric cells, methods of modulation, the electron camera, amplifier characteristics, and the latest developments.

The lectures will be illustrated by experiments, lantern slides, and demonstrations on high- and low-definition television receivers.

The fee for the course is 6s., and full particulars can be obtained from the Electrical Engineering Department.

Fecamp's New Wavelength

IN order to avoid clashing with the Eiffel Tower's new wave of 206 metres, Radio Normandie now works on 269.5 metres, which it shares with Moravska-Ostrava, Czechoslovakia.

New Attitude to Static

HALF-HEARTED measures to combat radio static are reported from Holland, where, it seems, certain kinds of man-made interference are considered to be unavoidable. To meet the situation, several Communes have published an order forbidding the operation of static-producing apparatus from midnight to 8 a.m. and during the early evening hours

A Jubilee Competition

NO less than £555 in prizes is being offered by the Radio Manufacturers' Association to radio retailers for Jubilee window displays. The first prize in the Window Dressing Contest is £35.

Australia's Wave Plan

AUSTRALIA embarks on its own "Lucerne Plan" in September next. The Australian Government announces a comprehensive rearrangement of wavelengths, with provision for ninety stations, seventy-nine channels being allotted to stations already in existence, the remainder being kept for projected transmitters.

The new Plan involves the wavelength alterations in the case of about half the number of stations.

The B.B.C. Charter

IN the House of Commons last week Sir Kingsley Wood, the Postmaster-General, announced that he had set up a Committee with the following terms of reference:—

To consider the constitution, control, and finance of the broadcasting service in this country, and advise generally on the conditions under which the service, including broadcasting to the Empire, television broadcasting, and the system of wireless exchanges, should be conducted after December 31st, 1936.

The Committee will be constituted as follows: The Right Hon. Viscount Ullswater, G.C.B. (Chairman); Major the Hon. J. J. Astor, M.P.; Mr. C. R. Attlee, M.P.; Mr. E. C. Davies, K.C., M.P.; Lord Elton; Sir William McLintock, Bt., G.B.E., C.V.O.; The Marchioness of Reading; The Right Hon. Lord Selsdon, K.B.E.; and Mr. H. Graham-White, M.P. The secretary of the Committee will be Mr. H. G. G. Welch, of the General Post Office.

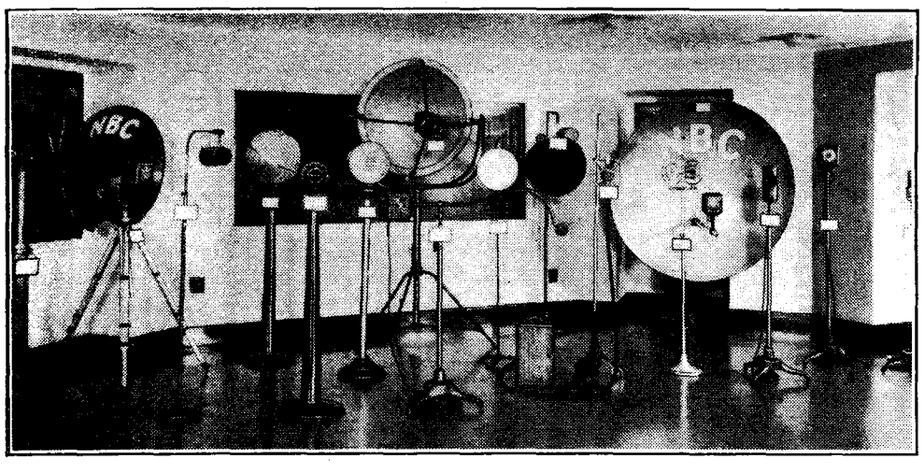

TEN YEARS OF RADIO HISTORY are epitomised in this display of broadcast microphones at Radio City, New York. Practically all types are included, from the early carbon granule models to the sensitive moving coil instruments of to-day. The parabolic reflectors are used to obtain directional effects from a distance.

The Jubilee Holiday

ALTERATIONS in our printing arrangements in consequence of the Jubilee holiday on May 6th require that Miscellaneous Advertisements intended for *The Wireless World* of May 10th should reach the publishers not later than first post on Friday next, May 3rd.

The Roumanian Way

A BROADCASTING repertory company has been formed in Roumania, the authorities considering that microphone work entails special training and experience. For the same reason, talks will be read, not by those who compose them, but by announcers or the specially trained actors.

This arrangement may please Roumania, but it has not been found popular in other countries. Frequently the attractiveness of a broadcast talk lies in the fact that the ordinary listener hears the actual voice and can sense the personality of the far-away celebrity.

Students of Static

RADIO parasite hunting classes have been opened in Paris under the auspices of the Post Office. A complete course of instruction in tracking unwanted noises lasts three weeks.

Captain Eckersley on Sidebands

CAPTAIN P. P. ECKERSLEY, formerly Chief Engineer of the B.B.C., will read a paper on "Asymmetric Sideband Broadcast Transmission" at a meeting of the Wireless Section of the Institution of Electrical Engineers at 6 p.m. on Wednesday next, May 1st.

New Radio Society

MR. E. NORMAN, of 20, Varley Road, West Ham, E.16, is organising a branch of the Anglo-American Radio and Television Society. Readers interested are invited to communicate with Mr. Norman, enclosing a stamped addressed envelope for reply.

The PERMANENT MAGNET Industry

Casting and Magnetising the Alloy

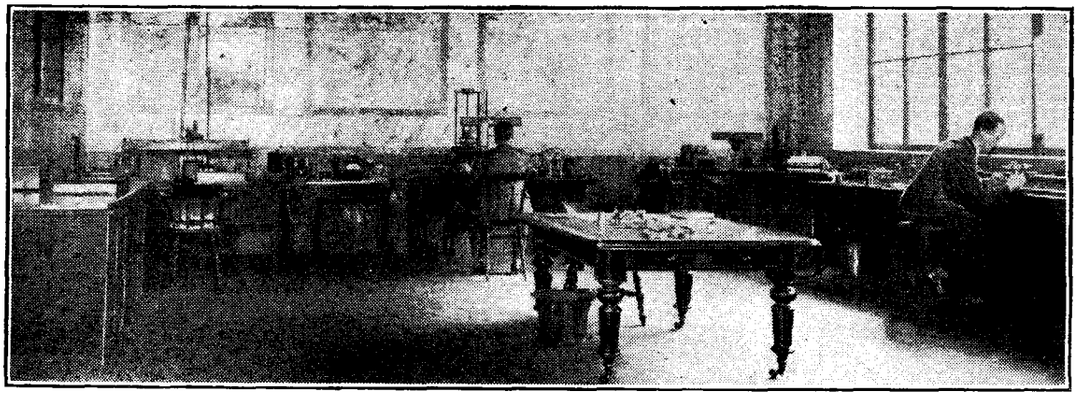

Fig. 1.—One of Sheffield's magnetic research laboratories.

IN an earlier article dealing with the Permanent Magnet Industry the historical development of modern permanent magnets for moving-coil loud speakers was briefly traced, and the variety of forms which have been made from time to time were illustrated. Little or no mention was made of the special class of ferrous alloys which has steadily increased in its scope and complexity, and possessing the property of efficiently maintaining a magnetic field after adequate magnetisation. Before describing the alloys which one by one have been discovered and added to the stock upon which the magnet designer can draw, it is proposed to discuss in outline some of the processes, plant and equipment in Sheffield necessary to maintain the large annual output in moving-coil permanent magnets which the radio industry now requires in its normal business.

THE most vital initial control in a steel works is chemical. Large laboratories are running day and night engaged on the routine control of raw materials and the final composition of alloys. This control is of the greatest importance because most base materials as purchased commercially contain other elements as impurities which may or may not be important in the manufacture of the particular alloy steel concerned. In any case, uniformity in the supply of raw materials and ultimate uniformity in the desired magnetic properties are largely dependent on chemical control.

Closely associated with the chemical laboratories are other laboratories devoted to specialised studies under the supervision of experts. Fig. 1 shows a magnetic research laboratory of this kind, where precise and often tediously long investigations are carried out. It has been found essential to have adequate facilities which are not directly under the control of the production departments for investigating those problems which involve painstaking laboratory processes, or which fall into the category of long-distance research.

Amongst the industrial processes in steel-making, the first we have to deal with is melting. It is not proposed to describe all the methods, but the two principal ones which have been extensively employed for magnet steel production are termed the "coke-crucible" and "high-frequency electric furnace" methods respectively.

In the first method a correct and mixed charge of base metal is introduced into a clay crucible and covered with a fireclay lid. This is heated to above the fusion point by immersing the whole pot with its contents into a coke- or gas-fired furnace, usually arranged several feet below floor level. The crucible pot enters by, and is removed from, a "hole" in the furnace room floor, and a large furnace may have in all three or four dozen "holes." Temporary lids of refractory material are placed over them when in operation. A good example of this type of furnace is illustrated by Fig. 2, in which the special tongs used for raising and lowering the pots can also be seen. The highest grades of carbon tool steels are made by this method, which possesses certain very important technical advantages.

Fig. 3 shows the next operation, in which a few experimental magnets are being cast. A "teemer" skilfully pours the molten metal into refractory moulds temporarily reinforced by metal bars, and his art consists in handling crucibles weighing, with their contents, about half a hundredweight, and in being able to stop quickly when the mould is nearly full. When the castings have cooled sufficiently, the moulds are broken up, and any adherent sand or roughness on the castings removed, so that they can

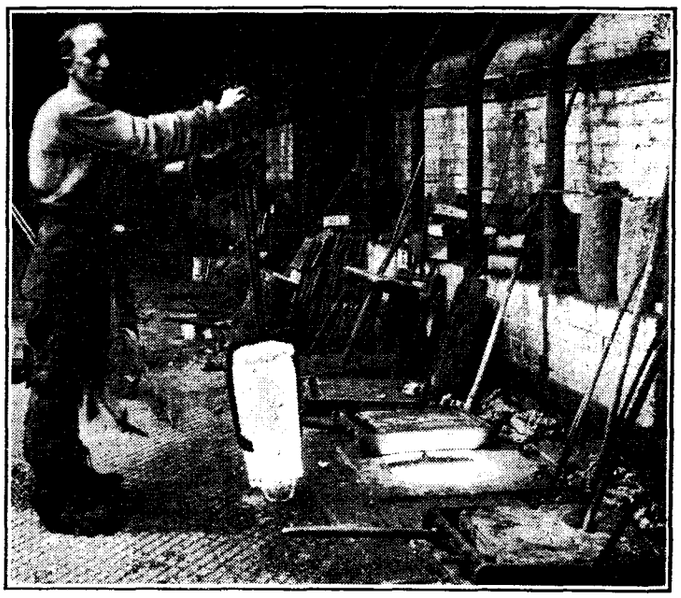

Fig. 2.—Typical "coke-crucible" furnace, showing an open "hole" and a "pot" of steel.

The Permanent Magnet Industry—

be passed forward for heat-treatment.

The other method of melting the charge of raw material differs considerably, in so far that the heat is not applied to the outside of the refractory container of the base metal, but is actually generated in the metal of the charge itself by electric currents. These currents can be likened to the secondary current in a transformer, which flows when the secondary terminals are short-circuited and the primary winding is excited.

To explain the analogy, the water-cooled copper turns of the furnace surrounding the refractory pot containing the conducting metal correspond to the primary winding, the core is air, and the initially closed circuital current paths in the solid pieces of metal (which eventually fuse into one self-closing turn) are the secondary turns.

Fig. 4.—Typical high-frequency electric furnace in act of casting.

By the ordinary laws of electro-magnetic induction a current will flow in the metal charge which will, in its turn, produce a magnetic field opposing the inducing field, but energy can be transferred to the charge until any desired temperature is attained, in the same way that the short-circuited secondary winding of a transformer can be fused if full excitation is inadvertently applied to the primary winding and maintained for an appreciable time.

Advantages of High-frequency Furnace.

This method is valuable as no contaminating flames come into contact with the molten charge, and, further, there is a vigorous natural circulatory convection which is set up by the electromagnetic reactions in the mass of the metal charge itself. It is necessary to employ a slag to seal the metal from outside air unless the particular alloy under production forms its own, because at high temperatures reactions are vigorous, and undesired oxidation might ensue.

A view of a typical electric furnace being tilted to cast direct into moulds is given in Fig. 4. The box-like portion contains the water-cooled inducing coil, which carries a large current of a few thousand amperes at a frequency of 500/1,500 cycles per second. The circuit is tuned by power condensers to reduce the impedance to a minimum and to work at unity power factor. This circuit is usually supplied from a special large motor-alternator set running at high speed, and control of the rate of heating can be effected by detuning and by rheostatic speed control on the set. A simplified circuit diagram is given in Fig. 5. This type of furnace is being largely used for the production of nickel-aluminium alloy in large quantities.

Fig. 3.—A "teemer" casting a few experimental magnets.

When very many magnet castings have to be made on mass-production lines the furnace is tapped into a large ladle crucible and this is then employed for successively filling up the rows of moulds laid out in orderly array on the foundry floor. Fig. 6 shows such a foundry scene where a few hundred castings are being produced at once. Very often "nests" of individual magnet castings are arranged in one moulding box.

Treatment After Casting.

As already mentioned, when the casting has been freed from sand and roughnesses, it is passed to the heat-treatment department. If it is a chrome or cobalt steel casting, it has first to be annealed, but if it is of nickel-aluminium alloy it is heated to a precise high temperature, depending on the composition of the alloy, and then cooled at a rate again depending on the composition and additionally on the form and dimensions of the casting. This process has to be carried out correctly for the best and most uniform magnetic properties to be achieved, but sometimes it is possible to correct a slightly erroneous first treatment by a second one at a lower temperature. It is essential to have good "works testing" facilities in order that the product shall be kept from deviating widely from an optimum process. A battery of heat-treatment furnaces of modern type is seen in Fig. 7, and much skill and experience on the part of the operators is essential where magnet alloys are concerned, especially in the case of the cobalt-chrome steels, to which triple heat-treatment processes are applied in order to produce the correct structural state for the best magnetic properties. Grinding operations are seen in Fig. 8, and drilling, tapping and light machining in Fig. 9.

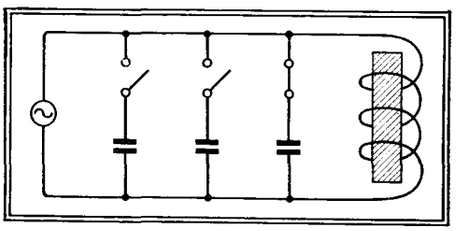

Fig. 5.—Simplified circuit for high-frequency electric furnace.

When a moving-coil loud speaker permanent magnet is completely assembled

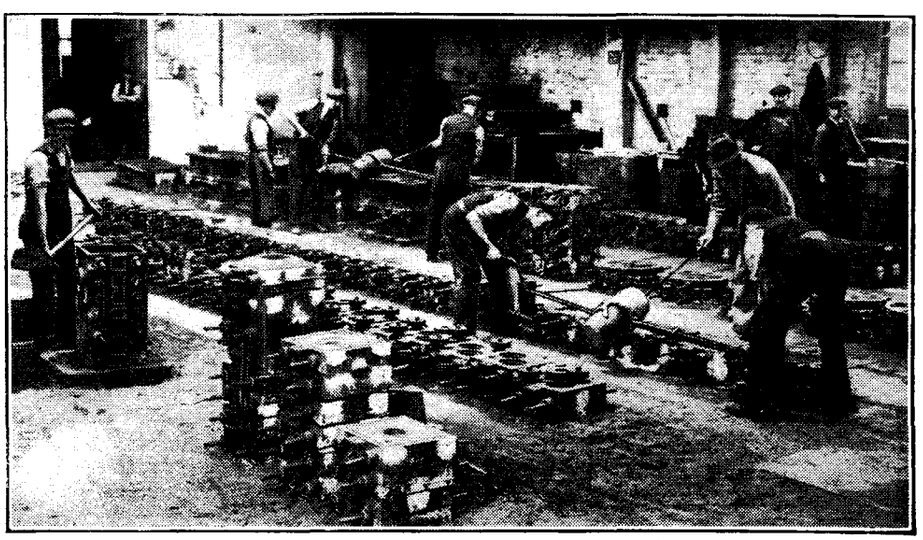

Fig. 6.—Foundry scene when making a large number of magnet castings.

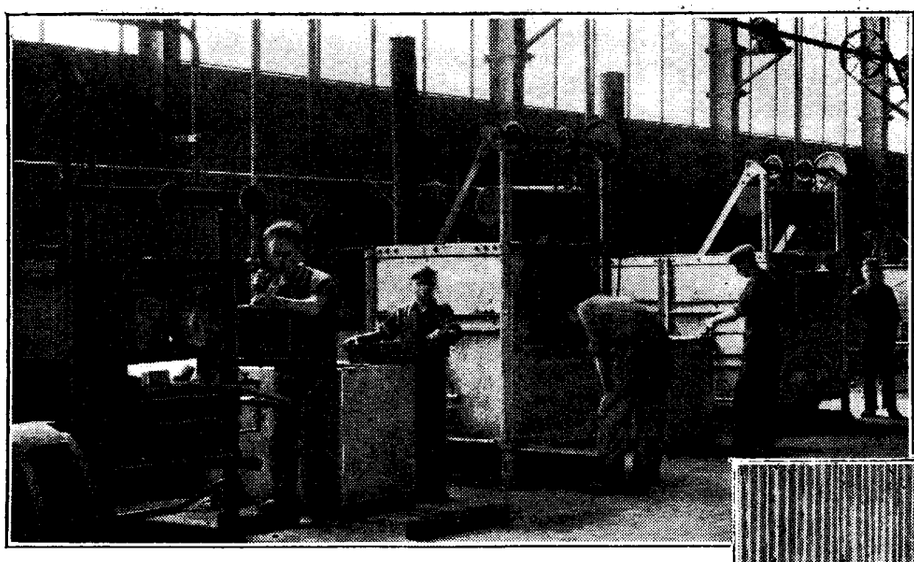

Fig. 7.—Heat-treatment furnaces of a modern type.

from tested magnet and inspected mild steel parts, there still remains the matter of magnetisation and verification that it is up to overall magnetic specification.

Magnetising

Most of Sheffield's magnet makers have installed direct-current surge transformers of the Burnand type, in which the secondary winding is, in effect, a single massive turn of copper of large section brought out to two bus-bars. A low-resistance loop of copper of large section is bolted to them, which completes the secondary circuit, and this current-carrying turn is the seat of the magnetising magneto-motive force. The primary circuit is supplied with a direct-current, which is broken by a hand-operated switch. On the rapid collapse of the flux in the core a transient current of several thousand amperes flows in the secondary circuit, and this can be utilised to produce very thorough magnetisation. The gap flux density is then carefully tested, using a suitable search coil and flux meter. Both differential and search coils of known displacement are employed for this purpose. Magnets failing to attain a minimum magnetic performance on testing immediately after magnetisation are rejected.

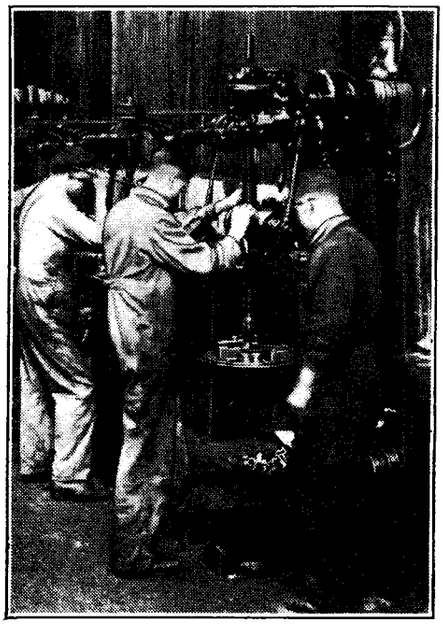

Fig. 9.—Drilling, tapping and light machining.

In magnet production there are many tests which are applied at various stages to ensure that initially the correct quality of material is secured and later that any of the manufacturing heat treatment and other processes have not impaired the quality subsequently. Some of the quantities observed will be defined in a further article, in particular those which are a measure of the effectiveness of the alloy, as such, from a magnetic point of view.

This outline has covered briefly the principal factors and manufacturing process in moving-coil permanent magnet production, and it is proposed that the different magnet alloys shall next be discussed, followed by a more detailed treatment of modern designs in nickel-aluminium alloys.

Television Progress in Germany

Fernseh Empfang (Television Reception). By Manfred von Ardenne. Weidmannsche Buchhandlung, Berlin, S.W.8. 117 pp., with 80 illustrations.

In *The Wireless World* for March 15th there appeared an article by Baron Manfred von Ardenne, well known to our readers for his pioneer work on cathode ray tubes and cathode ray television. In this article he explained, by means of numerous instantaneous photographs of the images received by his cathode ray receiver from the Berlin (Witzleben) ultra-short-wave transmissions, the various faults in the received image which are liable to be produced by defective design, incorrect adjustment, and outside interference. In the present little book, after some general discussion of the problem and a description of the Berlin transmitting equipment, he gives a detailed description of the actual receiving apparatus which he put together in order to receive these transmissions, both picture and sound, and on which these photographs were obtained. Additional image photographs are included, together with a large number of illustrations of the apparatus, diagrams of connections, and curves.

Although most of these image photographs were taken in 1934, before the Witzleben transmitter had various improvements made to it preparatory to the regular picture-and-sound service now opened, the excellence of the results when the receiver was properly adjusted indicates that the author is on the right lines in his methods, although he admits that the question whether his lines are the simplest possible cannot be answered until the other laboratories working on the development of television have published their results. The main object in publishing the book is to prompt an increased activity among amateur constructors during the interval between the present moment—which the author considers to be the turning point in television development—and the time when television will be a really popular amenity such as sound broadcasting now is. Before this time can come the author considers that at least two problems must be solved: television receivers must be made easier to handle and, above all, cheaper.

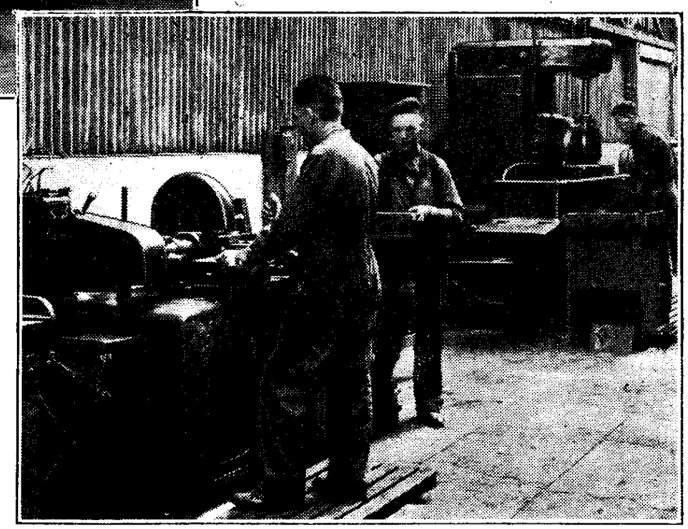

Fig. 8.—Machines for grinding the very hard nickel-aluminium alloy.

Perhaps the greatest interest to British amateurs lies in the fact that, apart from describing the equipment (which is, of course, designed for the Witzleben 180-line, 25 pictures per second, transmissions), the author discusses the various alternative methods and his reasons for adopting one in preference to the others. Thus, he employs a high-vacuum tube in preference to a gas-focused tube, a combination of electrostatic and magnetic deflection in preference to either system alone, and time-base circuits with a frequency of their own, "pulled-in" to synchronisation by the transmitter signals, in preference to complete control by the transmitter. On occasion he uses single-sideband reception, the advantages of which he discusses on pp. 94-95 and 114. H. D.

LF Amplification in Television Receivers

By W. T. COCKING

Designing Intervalve Couplings for High Frequencies

WHEN the low-frequency currents in television extend from a lower limit than we are accustomed to cater for in sound reproduction well into the radio-frequency spectrum, it is not surprising to find that their amplification involves special technique. This article deals in some detail with the design of suitable amplifiers, and it is shown that it is by no means difficult to obtain an even response over the enormous range of 25 c/s to 1,000,000 c/s.

IT has been pointed out many times in *The Wireless World* that high-definition television, of the 25 pictures 240 lines type, demands modulation frequencies up to about 1,000,000 c/s. The range of frequencies theoretically required for perfect results is infinite, but in practice a very close approach to perfection is obtained if all frequencies between some 25 c/s and 1,000,000 c/s are properly reproduced. As a result, the low-frequency amplifier must be of special design if it is to handle this wide range of frequencies faithfully. The term "low frequency" is really a misnomer when the frequencies in question extend well into the range which we are accustomed to call high or radio frequencies. It is suggested, therefore, that the term modulation frequency is more suitable, since the circuits have to deal with those frequencies by which the carrier is modulated.

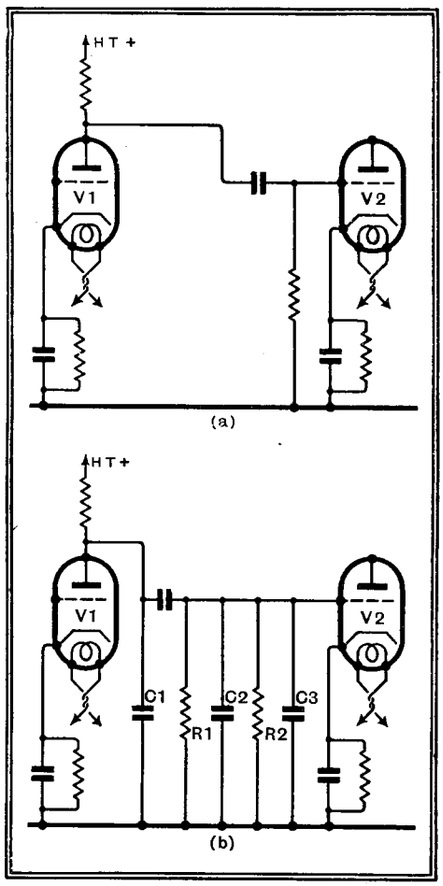

Fig. 1.—The basic connections of a resistance-coupled stage are shown at (a), and the effective circuit at (b), including the stray capacities and the input impedance of V2.

Before considering the type of couplings which must be used in the modulation-frequency amplifier, it is well to review briefly the requirements. The frequency response, as already stated, must be flat within very few decibels over the whole range of frequencies from 25 c/s to 1 mc/s. The detector output voltage which operates the amplifier is at present unknown, for we have not yet dealt with this important piece of apparatus, which presents specially difficult problems in television reception. The output is, however, very unlikely to exceed 1 volt peak. The cathode ray tube requires an input of some 20 volts RMS or 28 volts peak. It is essentially a voltage operated device like a valve, so that a power output stage will not be needed in our amplifier. The output valve, therefore, need not necessarily differ from those used in the earlier stage, and the total gain of the amplifier must be at least thirty times.

Valve Input Impedance

Turning now to a consideration of intervalve couplings, it is obvious that transformers will be unsuitable for the wide frequency range required, and we must turn to resistance coupling. This was dealt with very fully in recent issues of *The Wireless World*,[1] and as far as pure resistance coupling is concerned the data given there applies fully to television amplifiers. The choice of coupling condensers and grid leaks for the maintenance of an even response at the very low frequencies must be made entirely on the lines dealt with in that article, and will not be considered here.

It was shown that the response at high modulation frequencies, however, is largely dependent upon the stray circuit capacities, but that with modern triode valves of high mutual conductance and low AC resistance no difficulty is experienced in obtaining an even response up to 10,000 c/s. This is very far from being the case when the response must be good up to a frequency one hundred times as great!

[1] *The Wireless World*, January 11th and 18th, 1935.

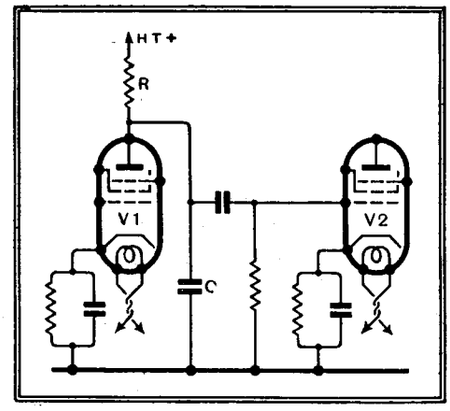

Fig. 2.—The input impedance of a screen-grid valve is normally no more than its grid-cathode capacity, so that the resistance-coupled amplifier can be exactly represented by this diagram, where C includes the total shunt capacity.

The response obtained from the ordinary resistance-coupled amplifier always falls off at high frequencies, and there are two effects which are responsible for this—one is caused by the inevitable stray circuit capacities, and the other by feedback through the inter-electrode capacity of the valve following the coupling. Although the first effect is by no means unimportant, the second is responsible for most of the loss at high modulation frequencies when triode valves are used. Fig. 1 (a) shows the fundamental circuit of two triodes with resistance-capacity coupling, but the true circuit taking into account the stray capacities is represented

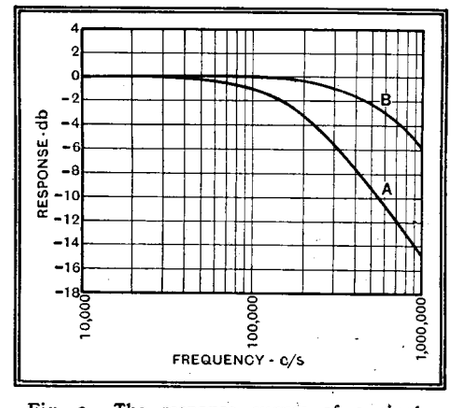

Fig. 3.—The response curves of a single resistance-coupled stage in which the stray capacity C totals 35 $\mu\mu$F; (A) is for a coupling resistance R of 25,000 ohms, and (B) for a resistance of 7,900 ohms.

HF Amplification in Television Receivers—

by Fig. 1 (b). Here C1 is the anode-cathode capacity of V1 with the addition of the stray wiring capacities, and C2 is the grid-cathode capacity of V2; both these capacities are constant and are actually real condensers formed by the proximity of the various electrodes in the valves and their leads.

The condenser C3, however, is different and has no physical existence as a condenser. It represents a portion of the input impedance of V2, which is due to feed-back through the anode-grid capacity of this valve. Actually, due to this feed-back, the valve imposes a load upon the coupling and the easiest way of allowing for this is to consider the valve to be perfect and include imaginary components C3 and R2 in the grid circuit which exactly represent the effect of its imperfections.

The values of these components depend not only upon V2 but on the magnitude and nature of its anode circuit load impedance. When this load is a pure resistance at all frequencies, the input

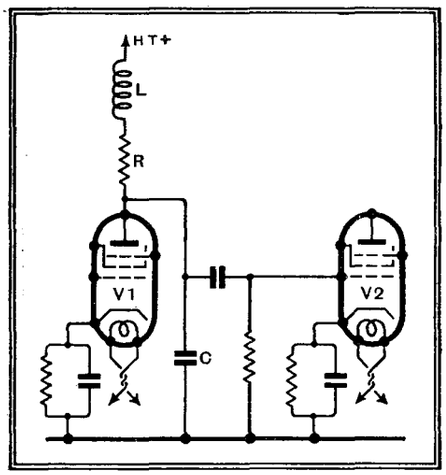

Fig. 4.—By including a coil L in series with the coupling resistance R, a flat response can be secured when the correct values are assigned to the components.

resistance R2 is infinite and so need not be considered; the input capacity C3 has a value which is (1 + A) times the grid-anode capacity of V2, where A is the amplification given by V2. In cases where the anode load is capacitive the input resistance may become very small, and if the load be inductive the resistance may be negative, and so cause instability if tuned couplings be used.

With uncorrected resistance-coupled amplification, the load on V2 consists of a resistance and capacity in parallel, and the exact expressions for the input resistance and capacity become somewhat complex. The amplification of V2 falls with increasing frequency, and in consequence of this C3 is not a constant capacity but one which falls with frequency. In an actual case, with an MHL4 valve, C3 had a value of 100 $\mu\mu$F at low and high audio-frequencies, but as the frequency was raised above 10,000 c/s the capacity fell until at 1,000,000 c/s it was about 60$\mu\mu$F. If this capacity were the only effect, it would not necessarily prohibit the use of triodes, but the input resistance exhibits even greater changes. At frequencies within the audible range, R2 is usually so high that it can be ignored. At 1,000,000 c/s, however, it may fall as low as 3,000 ohms! There is no way of correcting for the effects of such an input resistance, as we can for capacity, apart from limiting the gain of the preceding stage by using a load resistance which is small compared with 3,000 ohms. Of course, the input resistance can be kept high by using a suitably designed load for V2, but this would almost certainly involve a tuned circuit for the load, and as such an arrangement would be necessary for the preceding stage also, there would be grave danger of the input resistance becoming negative and causing instability. In addition, small changes in the values of components would have a large effect upon the input impedance of the valve.

The screen-grid valve or screened HF pentode represents the solution to the difficulty, for with valves of this type the grid-anode valve capacity is so small that it may be ignored completely, at any rate in a preliminary design. The effective circuit diagram then becomes that of Fig. 1 (b) with both R2 and C3 removed, and this is shown in Fig. 2, in which the capacities of the two valves C1 and C2 have been combined and are represented by the single condenser C, to which we can assign a value of some 35$\mu\mu$F. without much error in most practical cases. With a valve such as the MSP4, a value for R of some 25,000 ohms gives the maximum linearity together with a stage gain of about 50 times at low and medium frequencies. When the capacity C of Fig. 2 has a value of 35 $\mu\mu$F, the response at frequencies over 10,000 c/s is shown by curve A of Fig.

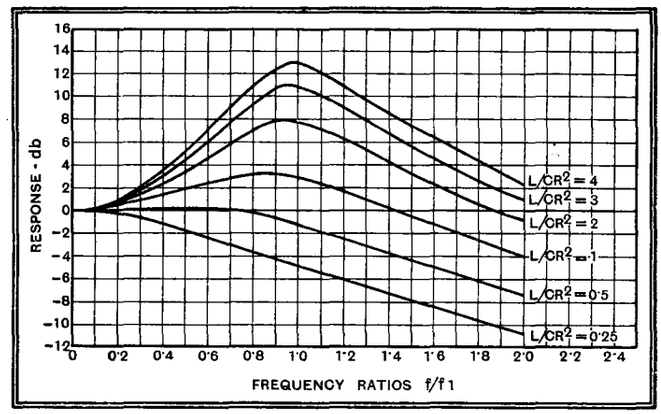

Fig. 5.—The design of corrected amplifiers is facilitated by these curves, which are the frequency response curves of a single stage for various values of L/CR^2. Frequency ratios are used to make them of universal application.

3, and it will be seen that above 100,000 c/s it falls off very badly indeed. By reducing the value of the coupling resistance, the response can be made much more even, as shown by curve B, for a resistance of 7,900 ohms, so that even 1,000,000 c/s the loss is only 6 db. This improvement, however, has been obtained at the expense of amplification, which has

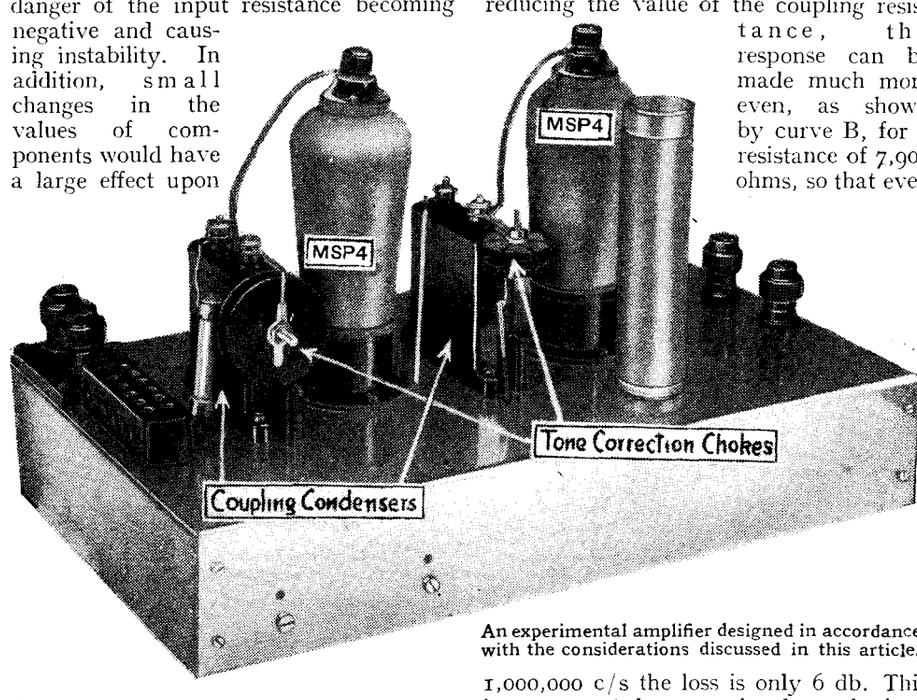

An experimental amplifier designed in accordance with the considerations discussed in this article.

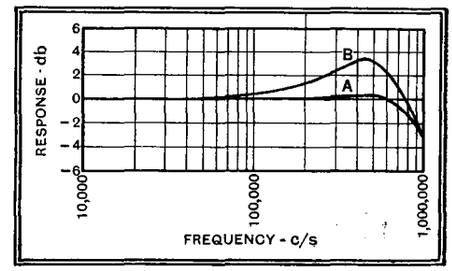

Fig. 6.—The response given by one corrected stage with C = 35 $\mu\mu$F. Curve A is for L = 2,530 μH and R = 8,500 ohms, whereas curve B is for L = 1,175 μH and R = 8,200 ohms.

LF Amplification in Television Receivers—

fallen to about 15.8 times. In addition, the reduction in the load on the valve restricts the maximum undistorted voltage output of which the valve is capable.

Now if we insert an inductance L (Fig. 4) in series with the coupling resistance and the correct values be assigned to the various components, it is easy to secure nearly constant amplification. The important factors in design are the frequency at which the circuit resonates and the value of L/CR^2, for with screen-grid valves the internal AC resistance is usually so high that it can be neglected, and this also applies to the grid leak of the following valve. The necessary formulæ will be given next week and with the aid of these and the curves of Fig. 5 a stage of almost any frequency characteristics can be designed. As an example of their use, let us consider the design of a stage which shall be as flat as possible with a drop of 3 db. at 1,000,000 c/s. From Fig. 5 we can see that the most even response is given by $L/CR^2=0.5$, for the curve is nearly flat for values of f/f_1 up to 0.8. For a loss of 3 db. $f/f_1=1.27$, so that we find that the resonance frequency is equal to $1{,}000{,}000/1.27=787{,}000$ c/s; C is fixed by the stray circuit capacities at some 35 $\mu\mu$F, so that we are in a position to calculate L and we find it to be 1,175 μH. The value of resistance follows from the chosen value of L/CR^2, and in this case is 8,200 ohms. The stage gain at low frequencies is the product of mutual conductance and R, and if the mutual conductance of the valve be 2 mA/V, it is 16.4 times. If desired, the complete response curve can be plotted by substituting the appropriate frequencies for the frequency ratios of Fig. 5, and the response for this case is given by curve A of Fig. 6. Had a value of 1 been chosen for L/CR^2, the characteristics would have been those of curve B and the stage gain some 17 times. *(To be concluded)*

HINTS AND TIPS

Practical Aids to Better Reception

HIGH-TENSION batteries feeding receivers with quiescent output stages are often subjected to heavy temporary overloads without their owners being aware of the fact.

QPP Extravagance

This is probably because it is not generally appreciated that the condition of maximum output may be reached during the reproduction of a continuous high-pitched note before the actual loudness is noticeably increased, particularly if the speaker is insensitive to high frequencies.

An excellent illustration of the point at issue is provided by the tuning note. Many people still make use of this signal in order not to miss the opening of a programme, but, as it is quite common for a milliammeter connected in a Class "B" anode circuit to register 40 milliamps during this transmission without the volume appearing excessive, there is a strong argument for keeping the volume control at zero.

Again, excessive use of reaction has effects which are not so obvious. But a few moments' experimenting with a meter will show that each time the set is allowed to squeal, a current flows which may easily reach 50 milliamps.

As a possible remedy for this unfortunate wastage, it would seem advisable to pay great attention to smoothness of reaction control, so that with a little skill distant stations may be picked up without accidentally "spilling" the set into oscillation.

Cabinet Vibrations

IN spite of the overwhelming popularity of the self-contained style of receiver, an inherent disadvantage must be admitted—the receiver chassis is directly subjected to the inevitable cabinet vibrations set up by the loud speaker. As a result, reception is sometimes accompanied by unwelcome "buzzes" or rattles which, though small, are sufficiently irritating to spoil one's complete enjoyment of a programme.

It is beyond the scope of a paragraph to deal with all the sources and cures of vibration, but bearing in mind that all such parasitic noises have their origin in some definite mechanical looseness or weakness and that they are often extremely tiresome to locate, the amateur will be wise to pay great attention to details when dealing with any self-contained set, either home-made or factory-built. Every terminal, whether in use or not, should, of course, be tight, and all components should be rigidly fixed to the chassis, with the notable exception of the ganged condenser; this component, and possibly the chassis itself, may, with advantage, be flexibly mounted on soft rubber buffers.

Seldom suspected, but none the less susceptible to vibration, is the actual wiring. Long, semi-rigid wires flapping against a hard surface or one another can set up a surprisingly loud rattle; whilst a short length of insulated sleeving of too large diameter for the wire inside it is capable of producing a similar effect.

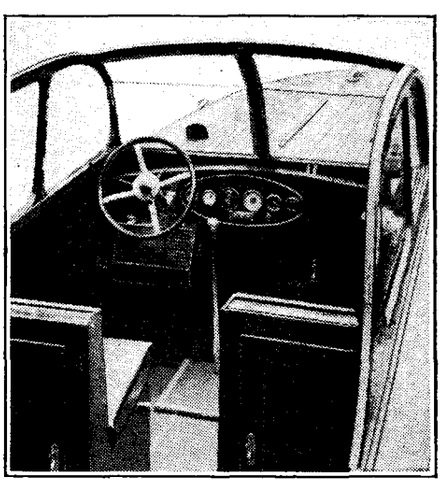

The car radio set is suitable for motor boats, provided they are fitted with electrical equipment of adequate capacity and standard voltage

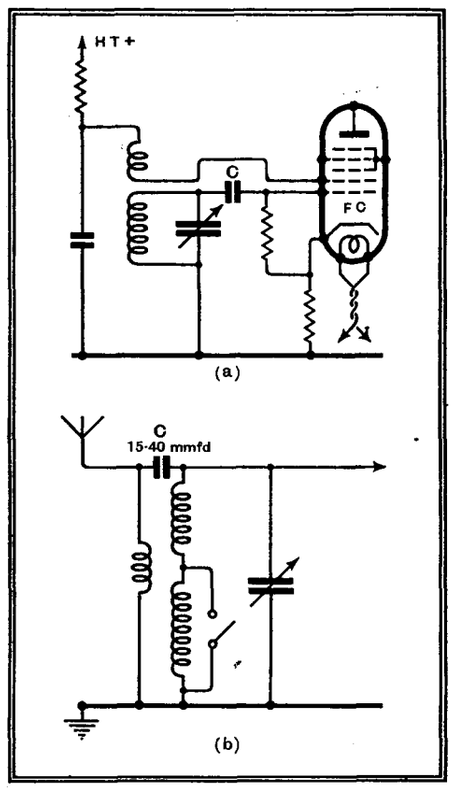

Fig. 1.—Positions in which paper-dielectric condensers (marked C) have been found unsuitable.

Losses in Paper Condensers

SMALL tubular paper condensers are obtainable in values around 0.0001 to 0.0005 mfd. and the experimenter may be tempted to use these in certain apparently unimportant functions for which they are really unsuitable. One such case arose recently where a condenser of this type having a capacity of 0.0002 mfd. was used as a grid condenser with a pentagrid oscillator (Fig. 1 (a)).

The circuit operated satisfactorily on one waveband, but was unreliable on the other, sometimes oscillating and sometimes refusing to do so. An increase in the reaction turns did not have any appreciable effect and it was not until the paper grid condenser was replaced with a mica one that the circuit behaved satisfactorily.

In this particular instance the losses in

Hints and Tips—

the condenser were introducing an effective resistance in series which was partly serving to damp the tuned circuit and partly to reduce the voltage actually applied to the grid, due to the grid stopper action. Paper condensers, therefore, should be used with caution in any position where they have to carry an appreciable high-frequency current.

Another instance of this was in a top-end capacity coupling (as shown in Fig. 1 (b)). The primary (aerial) winding was designed to resonate at 600 to 650 metres and was loosely coupled to the secondary. At the lower wavelengths the coupling acts like an ordinary primary, energy being transferred through the inductive coupling. At the higher wavelengths where the inductive voltage falls off very rapidly, the voltage across the primary as a whole begins to build up, due to the resonance, and some of this voltage is transferred through the top-end coupling on to the secondary, thereby maintaining a fairly uniform response.

The condenser required here is of the order of 15-40 micromicrofarads only, and once more a mica condenser is essential. If a paper condenser is used here additional losses will be introduced into the tuned circuit, causing the overall gain to be seriously reduced.

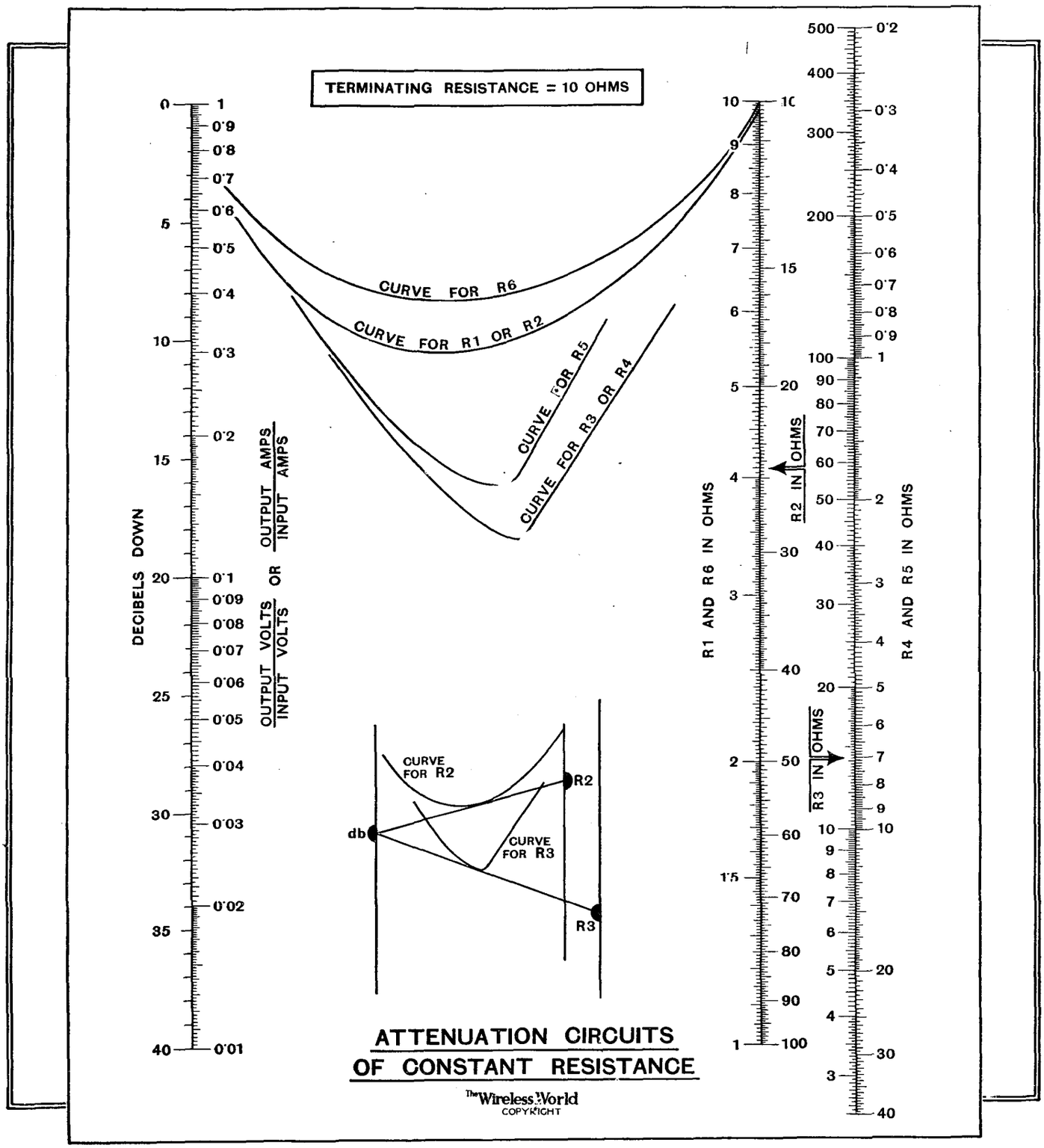

Abac for determining values of attenuation circuits : its uses are explained on the opposite page.

Radio Data Charts.—III.

Design of Attenuation Circuits of Constant Resistance

By R. T. BEATTY, M.A., B.E., D.Sc.

IF we take the circuit shown in Fig. 1 (a) we see that it contains two pure resistances of 0.5 and 1 ohm. Now add a terminating resistance of 1 ohm, as in Fig. 1 (b) and apply an EMF of 1 volt (either DC or AC) on the left or input side.

What is the resistance of the whole circuit looked at from the left-hand terminals? The two resistances in parallel of one ohm each are equivalent to a single resistance of 0.5 ohm which, together with the 0.5 ohm on the top, gives 1 ohm for the equivalent resistance of the whole circuit, as seen from the left. *This is equal to the value of the terminating resistance.*

Further, the input current of 1 amp. divides equally between the two parallel resistances, so that the output current is 0.5 amp.

Now, as in Fig. 1 (c), add a second "L" (inverted) circuit to the left of the circuit of Fig. 1 (b), i.e., to the left of the dotted line. The circuit on the right of this line has been shown to be equivalent to 1 ohm, and so may be regarded as a 1-ohm terminating resistance added to the circuit on the left of the line. Hence, the circuit of Fig. 1 (c), looked at from the left, is equivalent to 1 ohm.

It follows that the input current is 1 amp., and it is easily seen that the currents in the remainder of the circuit are as shown, the output current being 0.25 amp. If we add more L circuits on the left the equivalent resistance is always 1 ohm, while the output current is halved as each L circuit is added.

Attenuation circuits are required when voltage or current is desired of a value so small that it cannot be accurately measured. Suppose, for example, that a signal of 1 microvolt is required to test a radio receiver. As shown in Fig. 2, we couple attenuating circuits to a local HF oscillator and obtain the signal voltage across the terminating resistance. If a voltmeter shows 1 volt across the coupling coil we must attenuate to one-millionth of this value, and, since each L unit halves the signal, 20 units would be necessary! Evidently, the attenuation per unit must be made far greater, say 1/100 instead of 1/2. In fact, attenuation units must be designed according to the work which is to be done, and the abac facilitates such design.

Various types of attenuation circuits are shown in Figs. 3 (a)—(g). The L type is the simplest, but it must be used with the input on the left and the terminating resistance on the right. If used the other way both equivalent resistance and attenuation per section vary with the number of sections. The T and π types, being symmetrical, can be used either way.

For certain measurements complete symmetry is desirable, and this is given by the balanced T, π and L types, and by the lattice type.

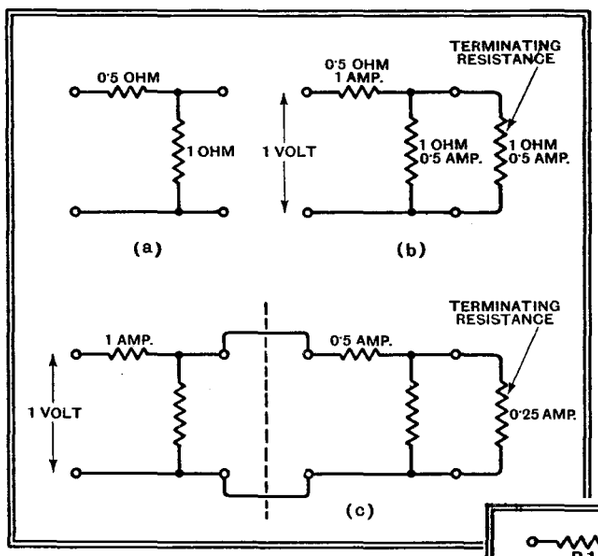

Fig. 1.—(s) Circuit containing two pure resistances. (b) The same with a terminating resistance added. (c) with inverted L circuit added (left).

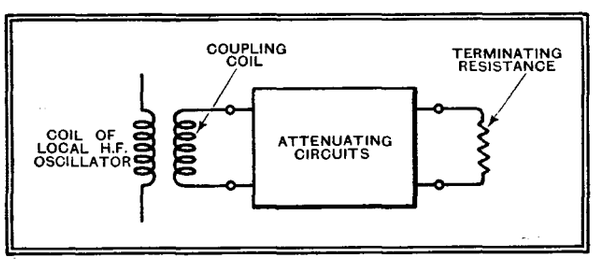

Fig. 2.—(Left) Attenuating circuit between local oscillator and receiver input.

Examples.

(1) Design an L unit to give an attenuation of 20 decibels, the terminating resistance being 10 ohms.

Fig. 3 (e) shows that we require R5 and R6. The abac gives R5 = 1.11 ohms, R6 = 9 ohms.

(2) If in the previous example the terminating resistance is 100 ohms, what do R5 and R6 become?

Multiply the previous values by 10. R5 = 11.1 ohms, R6 = 90 ohms.

(3) Design a π unit to give an attenuation of 40 decibels, the terminating resistance being 10 ohms. Fig. 3 (c) shows that we require R2 and R3. The abac gives R2 = 10.2 ohms, R3 = 500 ohms.

(4) Would the previous unit be suitable at 30 metres? No; stray capacities at this high frequency might alter the impedance of R3 considerably. Better use two π units in series, each attenuating 20 decibels. For each unit the abac gives R2 = 12.2 ohms, R3 = 49.5 ohms.

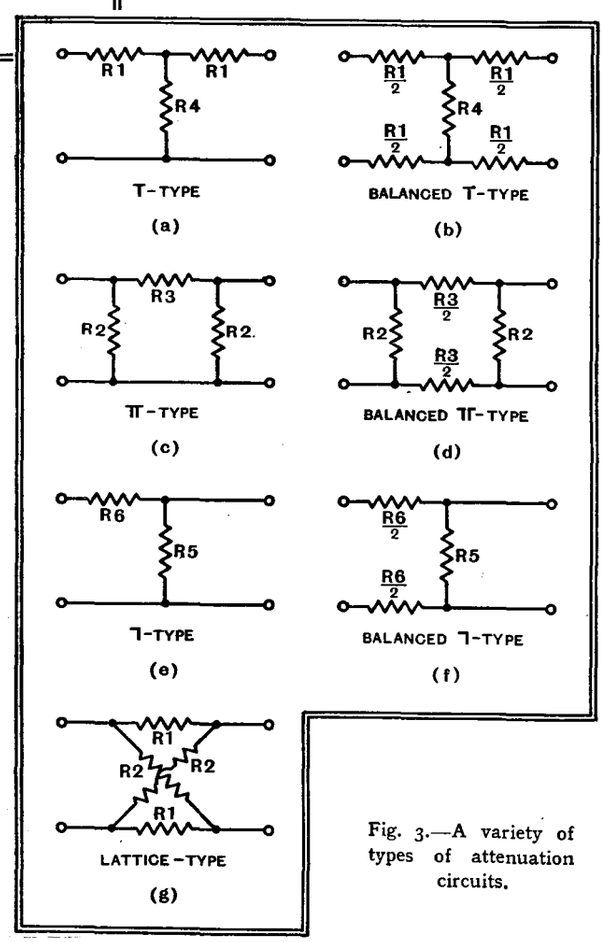

Fig. 3.—A variety of types of attenuation circuits.

Listeners' Guide for th

[Photos: B.I.P., L.N.E.R., B.B.C.

"RAILWAY RHYTHM"—a hot actuality programme—comes to Regional listeners on Wednesday next. Claude Dampier (left) will run a signal box and Claude Hulbert will do a spot of shunting. The feature has been prepared with the aid of the B.B.C.'s Mobile Recording Unit in collaboration with the railway companies.

COVENT GARDEN OPERA

A WEEK that sees the broadcasting of the opening night of Grand Opera at Covent Garden to seven million homes should be a memorable one . . . though many people will prefer the Air-do-Wells or trimming the herbaceous border.

Whatever our choice, Sir Thomas Beecham will be behind the microphones and footlights at 8.20 on Monday evening, when the Second Act of "Lohengrin" is broadcast in the National programme, with Lotte Lehmann as Elsa and Elisabeth Ohm as Ortrud.

Act II of "Tristan and Isolde" will be broadcast from Covent Garden in the Regional programme at 8.15 on Thursday, Sir Thomas Beecham conducting. The part of Tristan will be taken by Lauritz Melchior and Isolde by Frida Leider.

OPERA ABROAD

THE opening of the Covent Garden season in this country suggests that it is "bringing coals to Newcastle" to discuss operatic transmissions abroad. There are, however, at least two important events.

To-night (Friday) at 7.30 Budapest relays Verdi's "La Traviata" from the National Opera House. Wagner's "Tannhauser" will be relayed by Kalundborg from the Royal Opera Theatre at Copenhagen on Wednesday next, May 1st, at 8 p.m.

LIFE ON THE RAILWAY

HOT actuality with a sprinkling of farce will be the keynote of "Railway Rhythm," which will be broadcast in co-operation with the railways of Great Britain on May 1st (Regional).

[Photo: Kenneth Collins.

STAINLESS STEPHEN who helps in the "Railway Rhythm" programme by taking charge of the engine pits

John Watt and Max Kester, who are directing "Railway Rhythm," state that they are not allowing the technical element to overshadow the entertainment side. Stainless Stephen will be in charge of the engine pits; Claude Hulbert will do a spot of shunting, and Claude Dampier will run the signal box. The programme begins with our comedians leaving the great termini of London; slowly the "rhythm of the railway" will develop from the hub of the wheel through the multifarious enterprises and organisations which go to form the railway system.

The train starts at 8.45, but you can catch it any time up to 9.30.

COUNTRY LIFE

WHAT Peter Cresswell, the producer, describes as "a very good play," "Oak Trees," by John C. Moore, will be broadcast on Tuesday next, April 30th (Regional) and on the following day (National). The play is set in the countryside and revolves around the seventy-third birthday of an important personage, Ralph Grant, J.P., the part being taken by Jerrold Robertshaw. Carleton Hobbs takes the part of Mr. Tupp, in the unsympathetic role of Bailiff.

OPERATIC NOVELTIES

"FAMOUS Composers Portrayed in Operetta" is the title of a concert which the Vienna Station Symphony Orchestra will broadcast on Monday, April 29th, at 9.5. The programme includes tone portraits of Haydn, Paganini, Liszt and others.

This evening (Friday) Frankfurt offers a somewhat similar programme at 9 o'clock concerning famous historical characters who have been turned into operatic heroes. There will be some amusing comparisons between real persons and their operatic equivalents in the case of Boccaccio, Prince Eugene, Paganini, Goethe, and Schubert.

MODERN MUSIC AND POETRY

LOVERS of modern art should come home early on Thursday, May 2nd. to tune in the National programme at 10.15 for two decidedly "modern" items. Adolph Hallis gives a pianoforte recital of works by Debussy, Bartok and Stravinsky, and half an hour later there will be a discussion on modern poetry, English and American, between Cecil Day Lewis and Paul Engle.

MORRIS MOTORS BAND, a favourit on the National wavelengths, Sydne includes Beethoven's Egmont Over

ENGLISH MUSIC AT MOTALA

SWEDEN will pay tribute to Edward Elgar in a concert of sacred music to be broadcast from Motala this evening (Friday) at 7.50 from the Gustav Vasa Kyrkan. Elgar's "Adagio Religioso" will be heard, the programme also including the works of Vivaldi and Bach.

e Week

Outstanding Broadcasts at Home and Abroad

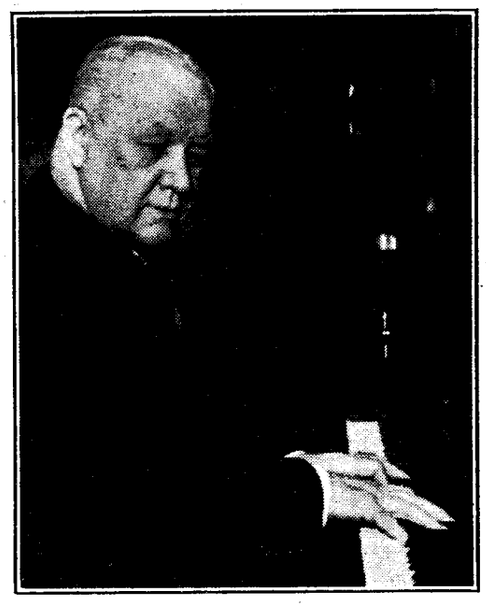

FRANZ LEHAR, the famous composer of light opera, whose 65th birthday occurs on Tuesday, April 30th, when a number of European stations will broadcast Lehar programmes.

THE CUP FINAL

To-morrow (Saturday) is George F. Allison's day. The famous commentator will give a kick-by-kick description of the Cup Final match at Wembley to-morrow afternoon at 2.30 between West Bromwich Albion and Sheffield Wednesday.

THURSDAY "MUSIC HALL"

I wonder whether "Music Hall" will lose some of its carefree abandon by being broadcast on a Thursday? In many households Thursday is an abstemious day both in the matter of food and entertainment.

"Music Hall," on Thursday next, May 2nd, will feature Hildegarde, a French-American diseuse, whose speciality is the singing of French songs in broken English. Other attractions are Rudi Grasl, the "Living Instrument," Arthur Prince and Jim, and Scott and Whaley, the Koloured Komedy Kings.

brass combination, will be heard at 2 p.m. V. Wood conducting. Their programme ture and Schubert's Marche Militaire.

MICROPHONE VISITS TO BROADCASTING STATIONS

The B.B.C., so far as I remember, has never given us a running commentary on broadcasting itself. This is what the Norwegian broadcasting organisation proposes to do on Monday evening at 6 o'clock, when the travelling microphone will visit the Oslo long-wave transmitter during a broadcast to describe the work of the engineers. The remainder of the evening will be devoted to a Festival programme commemorating the tenth anniversary of the inauguration of broadcasting in Norway. The travelling microphone will visit all the stations in the National network.

FOLK MUSIC

To-night (April 26th) from 10.30 to midnight Königsberg gives a concert of German folk music by the Kahrau Mandolin and Guitar Society. To-morrow from 7 to 7.30 Hamburg relays a concert of the Hamburg Folk Music Circle. A correspondent informs me that the instruments will be violins, double basses, and bandonions, the last named being an unusual treat.

LISTENERS CONTRIBUTE SKETCHES

The Air-do-Wells will be heard on Monday next April 29th (Regional) and 30th (National). The cast will again include Jean Colin, Effie Atherton, Claude Gardner, Ronald Hill, Wilfred Thomas, and Brian Lawrence.

Nearly all the material for this concert party will be new and will include three sketches contributed to the Light Entertainment department by listeners. The comedy this time will be reinforced by Marion Dawson, well known in the North as a pantomime "Dame."

TALK ON D. H. LAWRENCE

A talk in English on the works of D. H. Lawrence will be given by Mr. Reginald Spink in the Kalundborg programme at 1.30 p.m. on Sunday next, April 28th.

SOUTH AFRICAN CRICKETERS

The South African Test Team are being entertained to luncheon at the Hotel Victoria by the Empire Society on Monday next, April 29th. National listeners will be able to hear the Rt. Hon. the Earl of Athlone, K.G., propose the toast of "The Guests." Captain H. F. Wade, Captain of the South African cricket team, will respond.

NATIONAL MUSIC

If willingness to broadcast the music of another country reflected the international situation, all would be well in Europe to-day. To-night at 8.15 Warsaw broadcasts a concert of Italian music, and on May 2nd Radio-Paris relays a programme of Swedish music at 8.45. Paris P.T.T., at 8.30 on Tuesday, April 30th, gives Hungarian music by the National Orchestra.

The Auditor.

30-LINE TELEVISION

Baird Process Transmissions. Vision, 261.1 m.; Sound, 296.6 m.

MONDAY, APRIL 29th.
11.15—12.0 p.m.
Margery Wyn (songs); Freddie, Phyllis and Anne (in latest rhythms); Harry Hemsley in Cartoons for Winnie; Accompaniments by Sydney Jerome.

WEDNESDAY, MAY 1st.
11.15—12.0 p.m.
Divertissements:—Maria Sandra (soprano); Gavin Gordon (bass-baritone); Lydia Sokolova (Prima ballerina of the Russian Diaghileff Ballet); Harold Turner (dances).

HIGHLIGHTS OF THE WEEK

FRIDAY, APRIL 26th.
Nat., "Hit the Deck." ¶Violin Recital by Zino Francescatti. ¶Conversations in the Train.
Reg., Recital by Esther Coleman (contralto) and Herbert Fryer (pianoforte). ¶"Yellow Sands." a Devonshire comedy.
Abroad.
Hamburg, 11 p.m., Symphony Concert from Flensburg.

SATURDAY, APRIL 27th.
Nat., G. F. Allison's Commentary on the Cup Final. ¶Concert by Railway Clearing House Male Voice Choir. ¶"Music Hall."
Reg., Microphone Tour of the River Tyne. ¶Scheherazade (Rimsky-Korsakov) by B.B.C. Orchestra (D). ¶Ice Hockey Commentary: England *v.* Hamilton Tigers.
Abroad.
Strasbourg, 8.30, Opera Comique: "The Nuremberg Doll" (Adam).

SUNDAY, APRIL 28th.
Nat., Morris Motors Band. ¶Afternoon Service for Boy Scouts. ¶Reginald Paul Quartet. ¶B.B.C. Orchestra (E), conducted by Joseph Lewis.
Reg., Reginald King's Orchestra. ¶B.B.C. Military Band. ¶Recital by Elisabeth Schumann (soprano) and Ernest Lush (pianoforte).
Abroad.
Toulouse, 9, Concert Version of "Mignon" (Ambroise Thomas).

MONDAY, APRIL 29th.
Nat., 7.30, Keyboard Talk by Sir Walford Davies, C.V.O. ¶8.20, "Lohengrin," Act II, from the Royal Opera House, Covent Garden.
Reg., Henry Hall and the B.B.C. Dance Band. ¶The "Air-do-Wells." ¶"Foreign Affairs," by F. A. Voigt.
Abroad.
Eiffel Tower, 8.30, Music of the French Colonies by the Radio Symphony Orchestra.

TUESDAY, APRIL 30th.
Nat., The "Air-do-Wells." ¶"Freedom," by Wyndham Lewis. ¶Gershom Parkington Quintet.
Reg., "Oak Trees," radio play by John C. Moore. ¶B.B.C. Orchestra (C), conducted by Julian Clifford.
Abroad.
Paris (P.T.T.), 8.30, Hungarian Music by the National Orchestra. Conductor: Inghelbrecht.

WEDNESDAY, MAY 1st.
Nat., Russian Symphony Concert by B.B.C. Orchestra (B), conducted by Albert Coates. ¶"Oak Trees."
Reg., 8.45, "Railway Rhythm." ¶Medvedeff's Balalaika Orchestra.
Abroad.
Beromunster, 9.10, Beethoven Concert by the Radio Orchestra.

THURSDAY, MAY 2nd.
Nat., B.B.C. Military Band. ¶"Music Hall." ¶Modern Music and Poetry Discussion.
Reg., B.B.C. Orchestra (E). ¶8.15, "Tristan and Isolde," Act II, relayed from Royal Opera House, Covent Garden. ¶Violin Recital by Isolde Menges.
Abroad.
Warsaw, 9, Polish Music by the Station Orchestra.

UNBIASED

By

FREE GRID

Automatic Baby Control

AMERICA can always be trusted to think of bright ideas for ameliorating the lot of unhappy humanity. The latest effort is Automatic Baby Control, or A.B.C. The idea is certainly worthy of high commendation, but I must say that it savours of being an adaptation of a suggestion published in this journal many years ago.

It is, in fact, an elaboration of the old "baby alarm," in which a microphone is suspended over the child's cot and connected to the gramophone pick-up terminals of the family receiver downstairs, any noises from the wretched infant upstairs being conveyed to the fond parents. The American idea, however, is a distinct improvement on this and has evidently been brought about by the prevailing habit in that country of living in large barracks of flats, or apartment houses, as they call them.

Apparently babies and their revolting noises are apt to prove very disturbing to tenants of adjacent flats, so all the rooms in a new block of flats to be erected in New York are to be made soundproof. The microphone is to be suspended over the child's cot immediately above what an American journal calls "the anticipated source of noise." Probably parents will understand the true esoteric meaning of this mysterious phrase, for I frankly confess that it beats me.

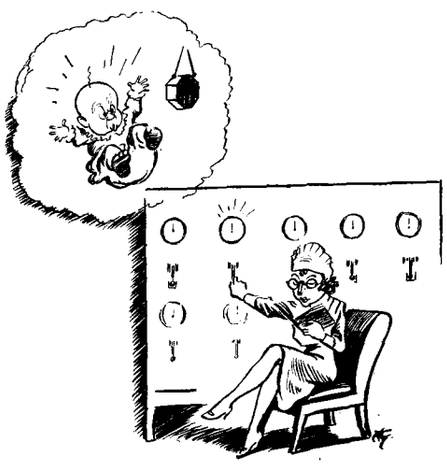

Administer an electric shock.

The microphones in the various bedrooms of the flats, are, however, not to be connected to the family wireless receiver. The parents are not to be disturbed at all. All connections are made to a special room in which sits a nursemaid provided by the owners of the block of flats. By means of a special indicator she will be enabled to see exactly which child is doing the sobstuff, and can therefore go immediately to the appropriate room and clout the child into silence.

I should have thought that it would have been more in keeping with modern progress if apparatus could have been fitted to enable the nurse to administer an electric shock of the requisite strength. At any rate, I know what I should do if I were given the job, and that is merely to disconnect my loud speaker. The infants would eventually silence themselves automatically owing to sheer exhaustion, and, in any case, the rooms are to be soundproof.

Death-ray for the Gongsters

I SEE that our old friend the death-ray has been invented once more, this being about the umpteenth time during the past ten years. Of course, it is a radio wave, but the length appears to be somewhat vague.

I wonder why it is, however, that, whenever a demonstration is given, nothing is ever killed. It is solely due, I suppose, to the inventor's consideration of the humanitarian feelings of the people to whom he demonstrates, though I should have thought that the latter could have raked up an old aunt or two whom they would be prepared to sacrifice in the interests of science.

In every case also a demonstration is given of stopping a petrol engine at considerable range by means of the ray. If there is anything in the latter experiment it is high time that police cars were fitted with the apparatus in order that they might stop speeders peaceably and quietly instead of kicking up the present infernal din with their gongs.

Manufacturers Forward

I WONDER if any reader can help me find a gadget, a specimen of which I have been hunting for high and low during the past few weeks. My search has extended from the lofty salons of Bond Street to the humblest stall in the Caledonian and Flat-Iron Markets, but has been completely fruitless.

What I want is merely a gadget to run two or more wireless sets or other electrical apparatus from the same *three-point* wall socket. There are, of course, bags of these devices for use with two-point sockets; they can, in fact, be obtained at sixpenny stores, but three-point ones are very elusive.

I have suffered so much in the past from severe shocks from the metal parts of reading lamps, vacuum cleaners and other domestic impedimenta, normally intended for use with two-point sockets, that I have chucked the whole lot out—the sockets, I mean—and substituted three-point plugs. I do not regret doing so, for I find that I can now hump an all-mains portable about from room to room and provide it with an earth connection lead, which vastly improves its performance.

My trouble is, however, that whereas previously I was able to operate electric shaving mugs, wireless sets and reading lamps from one plug by means of a three-way adaptor, I can now only run one thing at a time. Surely, some of our manufacturers are enterprising enough to produce such an article. There are gadgets of this type, I find, for use in connection with three-point heater plugs of the fifteen-amp. type, but do electrical manufacturers intend to force me into the dishonest practice of running my reading lamps from a heater point?

Teletalkies

A LOT of bilge seems to be written about the menace of television to the cinema industry. According to some people, who ought to know better, when

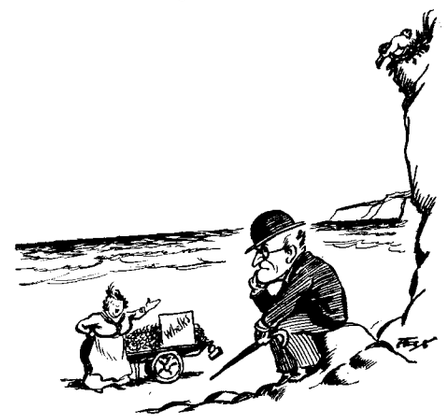

Who could eat whelks under such conditions?

television starts the local hothouse will be completely deserted, since people will stay at home to see the teletalkies, as "all films will be televised."

Now, even if the film magnates do soften their hearts to such an extent that they allow "all films to be televised" it won't make a ha'porth of difference to the size of cinema audiences. The reason is, of course, simply that human nature is what it is. The average man simply loves being thoroughly uncomfortable in a crowd. To realise this it is only necessary to take an excursion to Southend-on-Sea on any Bank Holiday. Not only are the trains packed, but the beach (?) is simply a mass of perspiring humanity. All this in spite of the fact that there are miles and miles of lonely stretches of coast in this island where the sea breezes are every bit as refreshing; but, as the Editor says, who could eat winkles and whelks under such conditions?

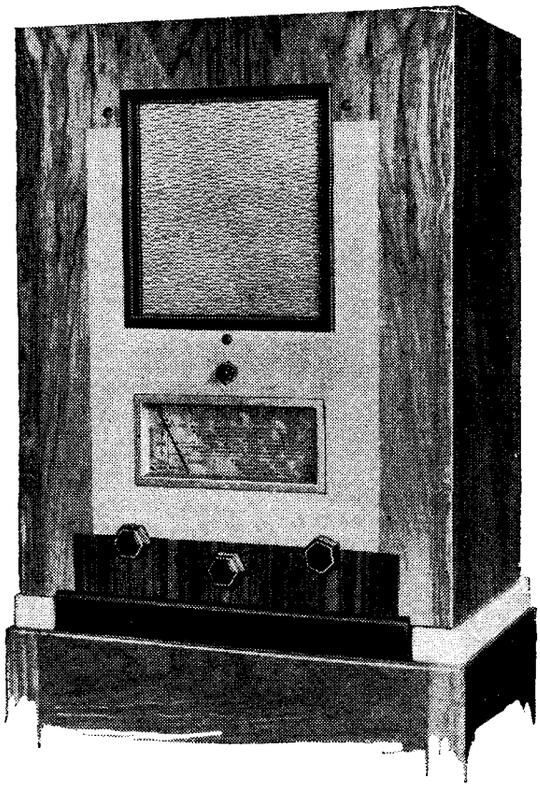

Ferranti AC/DC Universal

A Sensitive Superheterodyne Suitable for Use on AC or DC Mains

FEATURES.—Type.—*Table-model superheterodyne receiver for AC or DC mains.* **Circuit.**—*Heptode frequency-changer—var.-mu pentode IF amplifier—double-diode-triode second detector—pentode output valve. Half-wave valve rectifier.* **Controls.**—*(1) Tuning. (2) Volume control and on-off switch. (3) Wave-range switch. (4) Tone control.* **Price.**—*13 guineas.* **Makers.**—*Ferranti Ltd., Hollinwood, Lancs.*

IN its latest form the Ferranti Universal set employs four receiving valves in addition to the rectifier and barretter tube by which the filament current is maintained within the proper limits. The circuit of the first models followed closely the lines of the "Lancastria" AC receiver, but in the production sets now on sale separate valves are used in the second detector and output stages.

The first stage in the circuit is the frequency-changer, which is of the heptode type. It is preceded by an inductively coupled band-pass tuner, which also incorporates a feed-back circuit for the suppression of second-channel whistles. This circuit is remarkably successful, and there is no trace of any self-generated heterodyne interference on the medium-wave range, neither are there any oscillator harmonics on the long-wave range.

A variable-mu pentode is used in the IF stage, in which there is the usual complement of four tuned circuits. Both this stage and the frequency-changer are controlled by the AVC bias, and the anode current is a measure of the signal strength impressed on the aerial. By making the tuning indicator common to both these circuits an extended and more uniform range of indication is obtained.

The second detector valve is a double-diode-triode, and it is interesting to note that both diodes are fed from the secondary of the output IF transformer, the signal diode directly and the AVC diode through a small fixed condenser. The manual volume control takes the usual form of a high-resistance potentiometer in the resistance-capacity coupling to the triode amplifier, and AVC delay is provided by the cathode bias.

The output pentode is also resistance-capacity coupled to the second detector, and the tone control is shunted across the output to the loud speaker transformer primary. The switch for muting the internal speaker is mounted in the unit itself, and is operated by an extension spindle at the back of the set.

The valve heaters are, of course, connected in series, and the current is regulated by a barretter lamp which automatically adjusts its resistance to changes of current. The robust tubular dial lamp is also run in series with the heaters. Should this fail the set will cease to function, but a temporary repair can be effected by shorting the centre contact to the side of the screw cap—the barretter will take care of the change in resistance of the circuit.

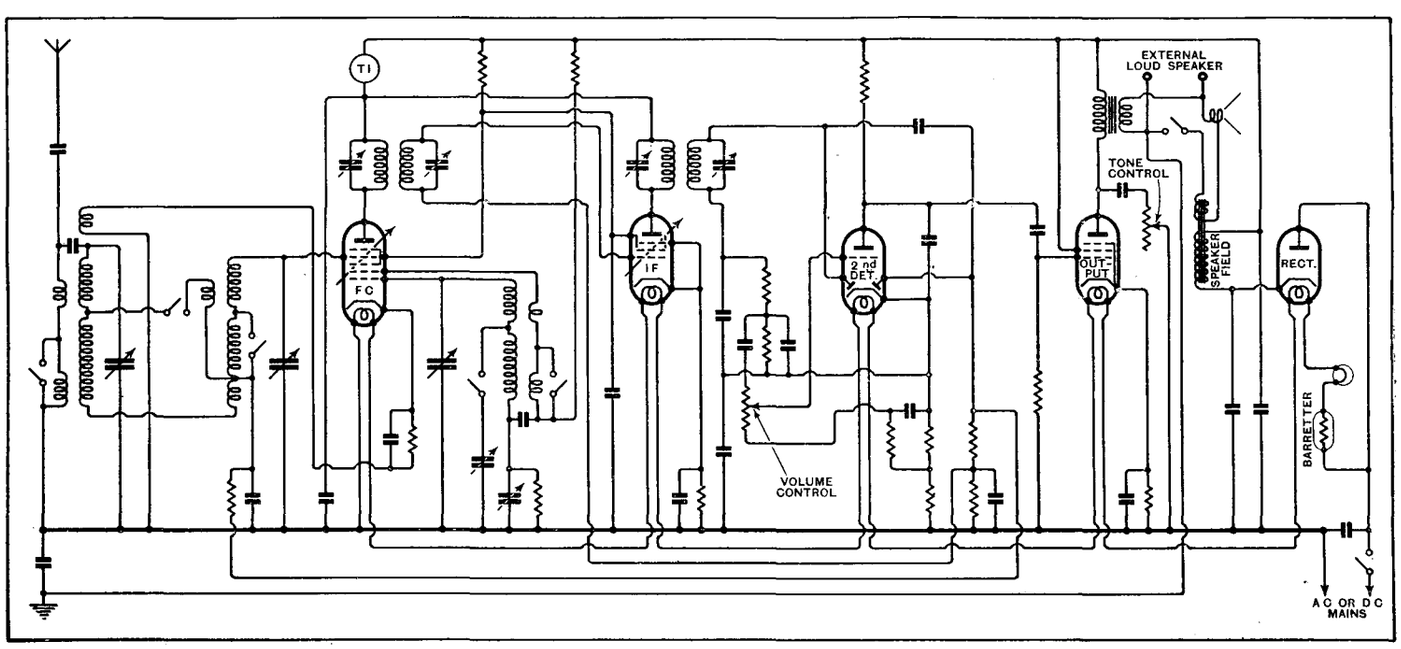

Complete circuit diagram. The special dial lamp is in series with the heaters and the filament current is controlled by a barretter.

Ferranti AC/DC Universal—

As in all Ferranti sets, the composite tuning scale gives a simultaneous indication of the setting of all the controls, as well as a quick identification of all the principal European broadcasting stations. The best adjustments of tone and volume can, therefore, be quickly repeated for all one's favourite transmissions.

Immediately the set is switched on there is an unmistakable feeling of reserve power and range. Off tune the background noise is lively—particularly on the long-wave range, but as soon as a worthwhile station is tuned in the automatic volume control reduces the sensitivity and with it the background noise to a satisfactory level.

On fairly weak stations the time constant of the AVC circuit makes itself felt by a temporary cessation of the programme, when strong atmospherics or intermittent local interference noises are present; but this effect does not interfere with the reception of the local or the more powerful of the foreign programmes. Of these there is a choice of five or six on medium waves in daylight, while the long-wave range is no less sensitive.

The selectivity is definitely good, and with careful tuning and some attention to the tone control only one channel is lost on either side of the local stations when working the set in Central London. The programme from the Deutschlandsender can also be received clear of interference if the tone control is turned to the "Low" position.

The reproduction is well balanced if the tone control is turned down from the maximum "High" position—otherwise the tone shows a tendency to be excessively hard and brilliant. Bearing in mind that in any universal set the HT voltage on the last valve cannot exceed the mains voltage, some blurring of tone is inevitable if any attempt is made to force the volume up too high. More volume can be used as the high-note response is progressively reduced, and quite pleasing results can be obtained by careful adjustment of the tone and volume controls.

Both in the finish and performance this receiver exhibits all the good qualities of Ferranti products, and offers a complete solution to the problem of choosing a set for DC supplies which may be changed to AC in the near future. Further, it is suitable for AC supplies of periodicity below 40 cycles, on which other Ferranti sets will not work.

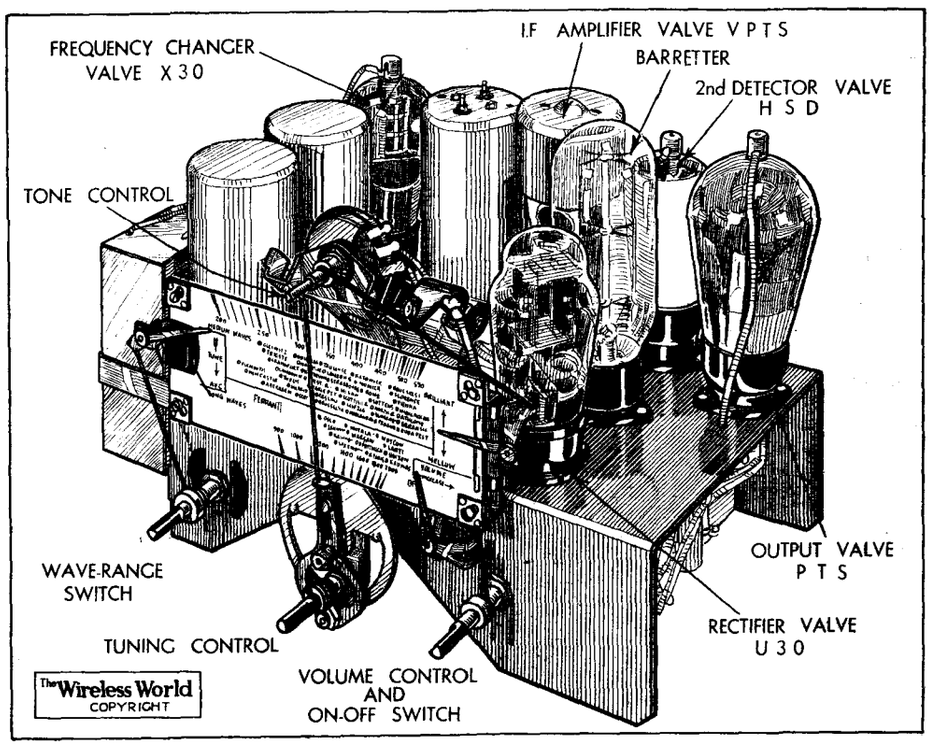

In this view of the chassis the cord couplings between the various control spindles and the indicating dial can be clearly seen.

G.E.C. "Overseas B7"

Battery Version of a Well-known Short-wave Receiver

To meet the demands of those living in districts remote from sources of power, the G.E.C. have now introduced a battery-operated short- and medium-wave receiver with a performance comparable with the AC mains "Overseas 7."

The general design follows closely the lines of the latter set, and the moulded bakelite cabinet and the insulation generally have been designed to stand up to tropical conditions. The seven-valve superheterodyne circuit comprises a signal-frequency amplifier, separate oscillator, first detector, IF amplifier, double-diode-triode second detector with AVC, driver valve and Class "B" output valve.

There are five wave-ranges—all calibrated, and selected by a single switch. The wavelengths covered are as follows:—(1) 12-30 metres; (2) 23-60 metres; (3) 43-115 metres; (4) 85-220 metres; (5) 220-550 metres.

A sensitive permanent magnet moving-coil loud speaker is built into the cabinet, and there is provision for connecting an extension speaker as well as for a gramophone pick-up.

The price of the receiver, including valves but excluding batteries, is £23 2s. It may also be obtained without cabinet for £21.

Belling-Lee Rejectostat

A FORM of the "Rejectostat" screened transmission line system for aerial downleads is now being sold by Belling and Lee, Ltd., Cambridge Arterial Road, Enfield, Middlesex. Special attention is drawn to the connection between the lower matching transformer and the receiver; the lead supplied is completely shielded right up to the aerial terminal. It is also stated that in many cases disappointing results are obtained from screened aerial systems through the use of unsuitable connecting cable, and accordingly a special shielded wire has been introduced for use in conjunction with "Rejectostats."

Belling and Lee have also prepared a booklet setting out very clearly and accurately the conditions under which a screened aerial is likely to be of real use in minimising interference; readers who think that there is even a remote chance of achieving the desirable end of improving the signal-to-noise ratio of their reception by aerial screening would be well advised to apply for a copy. The instructions on installation are illustrated, and in many cases they will suggest ways and means of improving the aerial system even under seemingly hopeless conditions.

A New H.M.V. Receiver

For A.C. or D.C. Mains

The Model 340 universal receiver just released by the Gramophone Co., Ltd., has a three-valve superheterodyne circuit employing multiple valves. It will work on DC or AC mains from 195 to 255 volts and 25 to 60 cycles. Automatic volume control is included and the price is 11½ guineas.

BROADCAST BREVITIES

By Our Special Correspondent

Summer Programme Cuts

THE usual modifications in the balance of programmes are contemplated for the summer holiday period, viz., July to September. They are expected to include the dropping of morning talks during July and August, the transmission of a single programme without alternative between 6.30 and 8 p.m. from the beginning of July to mid-September, and the omission of mid-week services during August.

The Staff on Holiday

Although there will be no alternative for an hour-and-a-half each evening all Regions will be granted the "privilege" of introducing suitable local "O.B.'s" during that period.

In August and September there will be an unusually large number of simultaneous broadcasts and probably some repetition of first-class programmes. By these means it is hoped to release as many members as possible of the B.B.C. staff during the holiday period.

Why Not Recorded Programmes ?

To my mind it is a pity that more use is not made of recorded programmes during the summer months. Why should seven million listeners forgo a choice of British programmes in high summer to suit the convenience of a handful of people in Portland Place?

By dint of extra work in advance, such as must be performed in most other organisations before the luxury of a holiday can be indulged in, a fine crop of summer entertainment could be Blattnerphoned in advance for administering in graduated doses throughout the holiday period.

Sir John Reith and his Staff

THE proposal that a fitting memorial to the late Chairman of the B.B.C. Board of Governors, Mr. J. H. Whitley, would be the formation of a Whitley Council for the benefit of the staff, recalls a similar suggestion alluded to in these columns over a year ago.

Improving Conditions

It is highly debatable whether a union is necessary. Sir John Reith is showing increasing vigilance in staff matters, and from time to time invites suggestions for the improvement of the conditions of work and the avoidance, as far as possible, of unduly long spells of work.

Still a Problem

To some extent the labours of the creative staff must necessarily be spasmodic. For instance, play producers and their assistants must put in long hours at rehearsal during the day and attend the broadcast performance at night. When the feature has been broadcast they need a short breathing space before beginning the next production. But work of this kind plays havoc with any fixed time tables for staff attendance and fortunately, after some years of bureaucratic miopia, the authorities now recognise this fact.

CHILDREN'S HOUR IN POLAND. Whether this pretty custom should be encouraged at Portland Place is open to question. The above photograph was taken when a violin class recently visited the Warsaw studio.

Toscanini in Four Broadcast Concerts

IT may be presumption on the part of the B.B.C. to create a "London" Musical Festival, but the fare provided this year, from Friday, May 10th, to Friday, June 14th, is of such an enticingly high standard that the leading city of the Empire need not disdain to lend its name to the event.

The Festival comprises eight concerts, four of which will be conducted by Arturo Toscanini, conductor of the New York Symphony Orchestra, the dates being Monday, June 3rd, Wednesday, June 5th, Wednesday, June 12th, and Friday, June 14th.

All Concerts to be Broadcast

Dr. Adrian Boult will conduct the first concert, which consists of Bach's Mass in B Minor, on Friday, May 10th, while Serge Koussevitzky, conductor of the Boston Symphony Orchestra, will direct the concerts on Friday, May 17, Wednesday, May 22nd, and Monday, May 27th.

All the concerts will, of course, be broadcast.

Studio for Nottingham

THE campaign for a broadcast studio in Nottingham promises to be successful in the near future. I understand that the B.B.C. is in favour of a policy of installing studios in all the larger cities and towns.

Already there are a number of transmission centres lacking broadcasting stations of their own but enjoying studio facilities. They include Bristol, Leeds, Liverpool, Glasgow and Swansea.

Floodlighting Broadcasting House

A GRANDIOSE scheme for picking out the aerial and roof of Broadcasting House in neon lights during the Jubilee celebrations has died at birth, but arrangements are going forward for floodlighting the upper part of the building. There will, however, be no flashing.

Avoiding Jubilee Crackles

The Corporation has issued a timely reminder to listeners that floodlighting displays and other electrical illumination can, if unsilenced, cause serious interference to broadcasting.

An appeal is being made to electrical contractors to bear in mind the amount of broadcast listening which will be carried on during the Jubilee celebration period, and to take what precautions are practicable to ensure that their apparatus does not cause disturbance.

How to Say it

THE naïve suggestion in the B.B.C.'s latest list of pronunciations that it is not unlikely that the man-in-the-street will hit upon a better word than the officially recommended "televiewer," is a reminder that it is an Advisory Committee and not the Corporation itself that propounds these recommendations.

The Corporation has never relied on the judgment of the man-in-the-street.

For the present "televiewer" must serve, the hope being expressed that it will rapidly learn to disguise its mongrel origin by shedding the prefix and showing itself to the world as "viewer."

What Does Mr. Brown Say?

What a fine crop of tongue-teasers have found their way into the latest list! The only surprising thing is that some of these words have not been discussed before. Perhaps the Committee had not previously been able to fix an appointment with Mr. Teddy Brown to decide the pronunciation of xylophone (zilophone); similarly, they may have searched far and wide before Mr. Hosier Hózier)—this is a surname—was located.

By the way, these are only recommendations to announcers; the B.B.C. does not presume to dictate to the public.

Nightingale Again

DESPITE the tempting offers of the Mobile Recording Unit to capture for all time the notes of the nightingale, the "O.B." department intends to broadcast the actual song of this temperamental artist during the week beginning May 13th.

Philomel's song will be heard in appropriate settings of the latest dance music.

Talking Background

At one time, I believe, it was suggested that the nightingale's song should punctuate the talks on "Freedom," a blue light informing the speaker when to stop talking. Then someone rudely suggested that there would be no need to stop talking . . .

Foundations of Wireless

By A. L. M. SOWERBY, M.Sc.

Part XIX.—The Simple Screened Tetrode

A FULL explanation of the internal screening system of the modern HF valve is followed by a description of its electrical properties, and the natural limitations imposed upon the amount of amplification per stage are discussed.

THE consideration of the problems of high-frequency amplification led us, at the end of Part XVIII, to two conclusions. First, that the anode load for a valve used as high-frequency amplifier must almost inevitably be a tuned circuit; and second, that the grid-anode capacity would infallibly result in uncontrolled oscillation unless means were taken to neutralise it by a special circuit. Alternatively, we may try to find a valve in which the capacity between grid and anode has been reduced to negligible proportions.

The capacity between any two objects can be reduced to zero by interposing between them as a screen an earthed metal sheet of sufficient size. The operation of such a screen can be understood by considering Fig. 101, which shows at (*a*) two plates A and B separated from one another by an air-space. There will be a capacity between them, so that the high-frequency generator V will drive a current round the circuit Earth—V—A—B—Z1—Earth. Across Z1, which is an impedance of some kind between B and earth, the current will develop a potential difference, and this PD will be the voltage appearing on B as a result of the passage of current through the capacity AB.

At (*b*) a third plate S, larger than the larger of the two original plates, is inserted between them in such a way that no part of either plate can "see" any part of the other. We now have no direct capacity between A and B, but we have instead two capacities, AS and SB, in series. If an impedance Z2 is connected between S and earth the current round the circuit Earth—V—A—S—Z2—Earth will develop a PD across Z2. Since Z2 is also included in the right-hand circuit the PD across it will drive a current round the circuit Earth—Z2—S—B—Z1—Earth, and this will give rise to a potential on B. So far, S has not screened A from B, there remaining an effective capacity between them which, if Z2 is infinitely large, amounts to the capacity equivalent to that of AS and SB in series. If S is thin this is practically equal to the original direct capacity between the two plates.

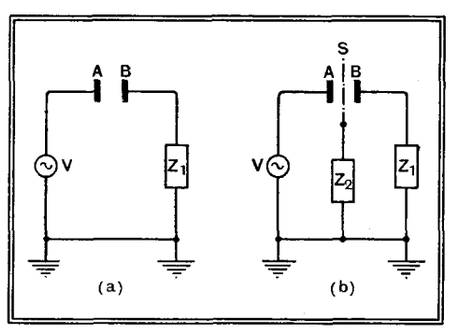

Fig. 101.—Illustrating the theory of screening.

Now imagine Z2 to be short-circuited. Current will still flow round the first circuit, but since there is now no impedance common to both there will be no driving voltage to produce a current in the latter. No matter what alternating voltages are applied to A, none will appear on B, even though large currents may flow *via* S to earth. The effective capacity between A and B has therefore been reduced to zero, and B is completely screened from A.

It is very important to note that S is only effective as a screen if it entirely cuts off A from B, thus replacing the direct capacity AB by AS and SB in series. Even with this proviso, screening is not complete unless S is definitely connected to earth either by a direct wire or through an impedance Z2, which is negligibly small.

This is the principle used in reducing the grid-anode capacity of a valve. A screen, so designed that it completely protects anode from grid, is interposed between these two electrodes within the bulb, while capacity between the leads running to grid and anode is avoided by taking the lead for one or other of these electrodes out through the top of the bulb. Clearly, a solid metal screen, while providing irreproachable screening, would cut off the electron flow from cathode to anode; it is therefore necessary to use as screen a close-mesh wire gauze through the openings of which electrons can pass. It is found that this necessary compromise with perfection still leaves a completeness of screening that falls short of that obtainable with an unbroken sheet of metal by a surprisingly small amount. In an unscreened valve, C_{ga} is usually of the order of 6 to 8 $\mu\mu$F.; with a gauze screen, properly earthed, this is commonly reduced to less than 0.003 $\mu\mu$F., and may even be less than 0.001 $\mu\mu$F. The structure of a typical screened valve is shown in the sketch of Fig. 102.

If earthed in the strictly literal sense the potential of the screen would be approximately that of the cathode. Since the attraction of the positive anode cannot extend through the screen to any appreciable extent, electrons in the neighbourhood of the grid of the valve would then

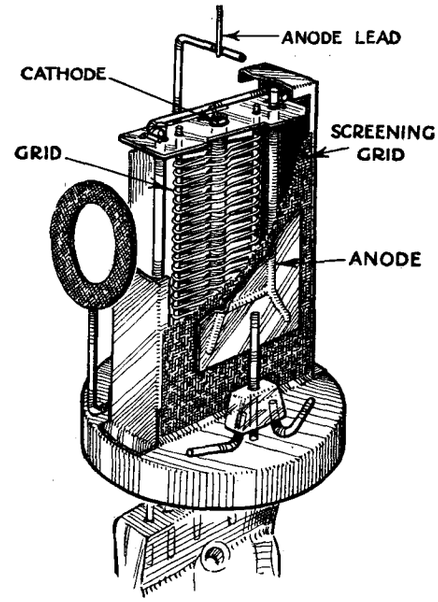

Fig. 102.—Showing construction of a typical screened valve. Note the "skirt" screening the grid lead (below) from the anode. This "skirt" is connected to the screen.

not be drawn onwards, and the anode current would fall practically to zero. But since, as Fig. 101 shows, the requirements of screening can be met by making Z2 negligibly small, we can connect a condenser of large capacity from the screen of the valve to earth, after which we can supply the screen, from any convenient source, with a positive potential.

The inner portion of the valve, comprising cathode, grid, and screen, is practically unaffected by the voltage at the anode; in consequence the total current through the valve is almost completely determined by the potentials of grid and screen. But if an electron arriving at the screen should happen to find itself exactly opposite to one of the openings in the latter, the attraction exerted upon it by the screen will come equally from all sides and, it will go straight through the opening. With the anode at zero potential it would fall back again to the screen, but if the anode is much more positive than the screen it will be drawn on.

Thus by making the anode more positive than the screen some of the electrons, initially set in motion by the positive

Foundations of Wireless—

potential on the screen, will pass through the latter and travel on to the anode. The more the potential of the anode exceeds that of the screen the more electrons will be drawn on; with rising anode voltage, therefore, the anode current rises and the screen current falls, the total remaining practically constant.

Curves of a typical screened tetrode are reproduced in Fig. 103, which shows anode current plotted against anode voltage. Each curve refers to the fixed grid-voltage Eg mentioned against it, and all were taken at a fixed screen-voltage of $Es = 80$V. So long as Ea is considerably in excess of Es, the anode takes practically all the current; over the range $Ea = 120$ to $Ea = 200$V on the curve for $Eg = -2$, the anode current changes by only 0.025 mA. As Ea falls below 120V, the proportion of electrons pulled through the screen to the anode begins to drop, as the rapid fall in Ia shows. The screen current Is, if plotted, would show a corresponding rise, keeping the total space-current constant.

High AC Resistance

The reasons for the peculiar shape of the curves for values of Ea lower than Es will be discussed in connection with pentodes; for the present it is enough to note that a screen-grid valve is always used with an anode voltage considerably in excess of that on the screen.

The extreme flatness of the curves over the working region to the right of the diagram indicates that the AC resistance of the valve is very high. For the curve $Eg = -2$, the change of Ia by 0.025 mA. for a change in Eg of 80V. indicates a resistance of $80/0.000025 = 3.2$ megohms. But this value depends far more than in the case of the triode upon operating voltages. Reducing the bias reduces also the AC resistance; reading off values from the curve for $Eg = -1$ gives an AC resistance of 350,000 ohms only, which is about one-tenth of the value found for $Eg = -2$.

This rapid variation of AC resistance is not accompanied by corresponding changes in mutual conductance or slope. Reference to the small curve inset on Fig. 103, which shows the variation of anode current with grid voltage at $Es = 80$ and $Ea = 200$ at once makes clear that over a wide range the slope g of the valve is nearly constant at about 2.1 mA. per volt. At $E = -1$, $g = 2.45$, while at $E = -2$, $g = 1.45$ mA./V. Since the amplification factor of the valve is given by $\mu = g\,Ro$, we can find its value from the figures for g and Ro at these two bias points; at $Eg = -2$, $\mu = 1.45 \times 3{,}200 = 4{,}650$, while at $Eg = -1$, $\mu = 2.45 \times 350 = 880$.

In the triode, the amplification factor is determined almost entirely by the geometry of the valve, and therefore does not vary over these extraordinary ranges; further, it is much lower, seldom exceeding 100. Nevertheless, the screen-grid valve, used as a high-frequency amplifier, does not give such enormously enhanced gain as these startlingly high figures might suggest, for their effect is very largely offset by the valve's very high AC resistance. Fig. 104 (*a*) shows a simple tuned-anode stage of high-frequency amplification, preceding a grid-detecting triode V2; with the exception of the addition of the screen circuit, with its large by-pass condenser to earth, the arrangement exactly duplicates that for a triode. At (*b*) is shown the equivalent anode circuit of the valve, the signal-voltage Vg at the grid being represented, as before, by μVg volts in series with the AC resistance of the valve. If R, the dynamic resistance of the tuned circuit, is 100,000 Ω, the amplification given by the valve works out as 196 times for $Eg = -1$ and 141 times for $Eg = -2$. The rising amplification factor has been accompanied by so large a rise in AC resistance that the gain actually *drops* in passing from $Eg = -1$ to $Eg = -2$.

In most practical cases the impedance of the valve is so very much higher than that of the tuned circuit connected to its anode that R is almost negligible compared with Ro. A good approximation to the correct value for the stage-gain can then be had by writing $A = \frac{\mu R}{Ro}$, or $A = gR$. The conditions for high gain with a screen grid valve are therefore simply that we choose a valve of high slope and follow it with a tuned circuit of high dynamic resistance.

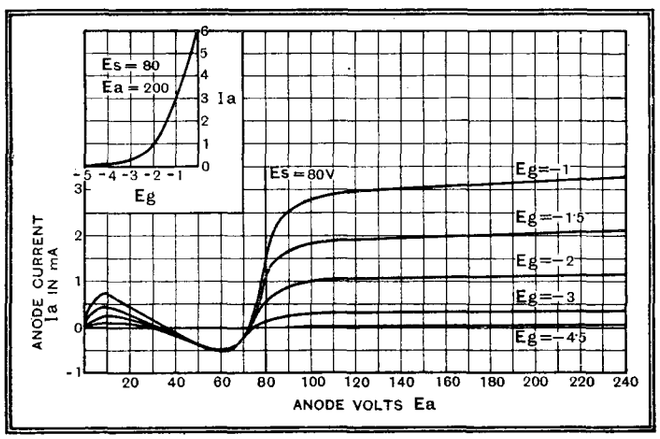

Fig. 103.—Characteristic curves of typical screened tetrode. Only the flat part of the curves to the right of the line Es are used for amplification. Inset: Ia—Eg curve to show approximate constancy of slope.

Apart from these considerations, the screen grid valve behaves exactly like a triode from which the grid-anode capacity has been removed; all the principles and methods discussed in Parts XII and XIII can therefore be applied to the tetrode.

The introduction of the screening makes it quite possible to build up and use successfully a circuit such as that of Fig. 104 (*a*) without running into difficulties due to oscillation. It can be shown[1] that the stage will be stable provided that the numerical value of a quantity H is less than 2. This quantity is given by the relation $H = g\omega\, Cag\, R1R2$, where $\omega = 2\pi \times$ frequency of the signal being amplified, and R1 and R2 are the effective dynamic resistances of the tuned circuits connected to grid and anode. High values of R1 and R2, which imply circuits of low inherent losses, tend, as might be expected, to produce oscillation. So also do high values of valve-slope or grid-anode capacity, while the likelihood of instability is greater, other things being equal, the higher the frequency of the signal it is desired to amplify.

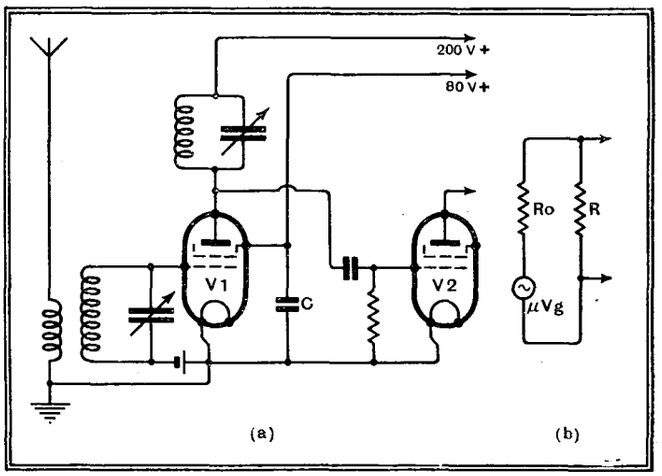

Fig. 104.—A simple HF stage employing a screened valve with tuned-anode coupling, and (dia. *b*) equivalent anode circuit of the valve. If R is small compared with Ro, gain of stage is approximately gR.

For a valve for which $g = 2.5$ mA/V, $Cag = 0.005$ μμF., used at 1,500 kc/s (200 metres), we can find now the maximum dynamic resistance that the tuned circuits can have without causing oscillation. For critical oscillation $H = 2$, so that we can write $R1R2 = \frac{2}{g\omega\, Cag} = \frac{2}{118} \times 10^{12}$. If the two tuned circuits are alike each may have a maximum dynamic resistance equal to the square root of this; *i.e.*, of 130,000 ohms. Since this represents a tuned circuit only a little better than the average, it is clear that the inter-electrode capacity assumed for the valve is just on the maximum permissible limit for a single stage of amplification. Even slight coupling between grid and anode leads external to the valve itself would add capacity enough to provoke oscillation: for example, the tuning condensers, and their leads will need screening.

[1] "The Stability of the Tuned-Grid Tuned-Plate H.F. Amplifier," Beatty, *Wireless Engineer*, January, 1928, p. 3.

Letters to the Editor

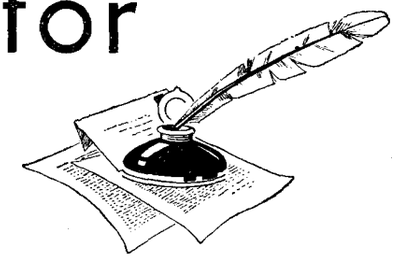

The Editor does not hold himself responsible for the opinions of his correspondents

Kilowatts at the Transmitter

THE note, "What Price Kilowatts Now?" ("Broadcast Brevities," in April 5th issue) serves as a reminder that if receiver gain, depth of modulation, and atmospheric conditions all remain constant, the power output from the loud speaker (in milliwatts) varies directly as the power (in kilowatts) in the aerial of the transmitter. For this aerial power is proportional to the square of the aerial current (and radiation resistance), while the field-strength (mV per metre) is proportional to the first power of the aerial current; consequently field-strength varies as the square root of transmitted kilowatts for a given transmitting aerial. Now it is the field-strength (with the aerial system) which determines the input voltage to the receiver; and for constant receiver gain the loud speaker power is proportional to the square of the input voltage, and hence simply proportional to the transmitted kilowatts. Having established this fact, it follows that a reduction of power from 50 to 20 kW represents a loss of only 4 db.—a loss which in any case would not need a drastic readjustment of the volume control, and would be taken up by AVC if fitted.

On the other hand, a decrease of 4 db. in the signal/noise ratio when this ratio is already poor could be very noticeable. Practically speaking, therefore, a change of power will affect only distant listeners, and since there is the Droitwich transmitter on the same programme, one would not expect to find many listeners relying on the Little Nationals outside their immediate service areas. No doubt that explains the success of the B.B.C.'s latest economy, and it would seem that both in theory and practice the change is justified. D. A. BELL.

Magdalen College,
Oxford.

Empire Reception

INDIA'S wireless listeners are at present few. They are neither numerous enough nor influential enough to make their voice felt. But there are abundant signs that that will not be so for much longer. In the interests, therefore, of the thousands of listeners who will one day be sufferers if something is not done, I wish to register a protest against a source of much trouble and annoyance that should be easily remediable.

I refer to Morse interference. Indian listeners for the major part of the year have to depend almost entirely on what is called the "short waveband," covering a range of wavelengths from about 13 to 80 metres. Shortwave broadcast transmissions are principally confined to five very small regions in this band, namely, 16 metres, 19 metres, 25 metres, 31 metres and 49 metres. They are crowded together in these small spaces. For example, there are no fewer than 19 short-wave stations operating between 49 and 50 metres. It does not therefore seem unreasonable to ask that Morse transmitters should leave these small regions alone and confine themselves to the rest of an enormous band which is largely vacant and contains ample room for all.

But do they do it? Not a bit of it. It would be possible almost every evening now to get perfect reception of, for example, Daventry (GSB) on 31.55 metres and of Zeesen on 31.38 metres, but evening after evening both stations are completely ruined by Morse sitting right on top of them. It is only when by some chance the Morse stops for a while that one gets a chance of realising what is easily possible in the way of reception of European stations.

It is the same story on the 49 metre band. Who are these Morse fiends? Are they entirely unregulated by anyone? Let them come out into the open and justify their existence in these particular places. To the listener it looks like mere selfishness and thoughtlessness when there are so many empty places near by which would serve them equally well. For the reason stated at the beginning of this letter I hard expect to rouse the voice of authority, but is it too much to ask that should this letter happen to catch the eye of those who transmit Morse signals night after night on 31 and 49 metres they will come forward and explain just why they have to choose those particular wavelengths and thereby ruin the chances of getting good shortwave reception in this country? H. R. MEREDITH.

Patna, B. & O., India.

Pilot Lamps

I WAS interested in the query regarding pilot lamps in DC and universal circuits. Like your querist, I, too, was annoyed by the behaviour of my dial light. I have since entirely cured the dimness by connecting the bulb and its shunt in the common negative wire to the set.

As this wire includes both heater and high tension current it will be seen that as the valves begin to settle down after being switched on, the high tension current, commencing to flow, brings back the brilliancy of the bulb to the strength it had when the first surge flowed through from the heaters. I have had my present bulb in use for over a year.

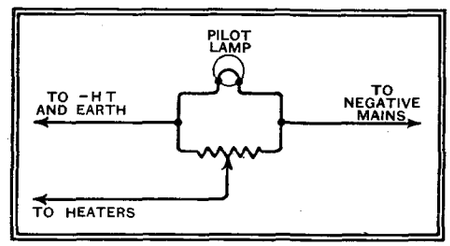

Incidentally, I find that when connected in this manner the pilot light forms a tuning indicator, responding to fluctuations in HT current from the HF stages. (I have a drop of 20 mA on average signals, the total HT current being 70 mA.)

It is possible to experiment in the proportion of heater to high tension current passing through the light by a potentiometer (a "Humdinger" does well) as in the accompanying diagram. It may be necessary to transpose "heater" and "earth line" connections, depending on the currents of the set to which this idea is applied. W. C. RITSON.

Stromness.

Do Transmitters Tire?

REFERENCE was made in *Wireless World* dated March 15th, 1935, under the heading "Distant Reception Notes," to the falling off in signal strength in Great Britain from the two Brussels stations, providing yet another instance of the apparent deterioration of transmitting plants with the passage of time. As the output of both transmitters is still as usual, one is forced to the conclusion that the waves, after leaving the aerial at normal strength, are now more rapidly attenuated than they used to be.

The two aerials are supported by three steel lattice masts of the self-supporting type. They are 100 m. high (328ft.), and are earthed. They were built about six years ago. Under one of them runs a footpath, and it has been noticed that after a few days of dry weather the path under the tower and in the immediate vicinity of it dried more quickly than the rest. This was not noticed a couple of years ago. It has, however, been accentuated in recent months, and a striking and extremely sudden change from dry to damp soil is now visible. Owing to vegetation it is hardly possible to state definitely that the same phenomenon is present round the other two towers. The increase in dryness of the soil round the tower increases the resistance to earth of the tower. This tower, being 100 m. high, approaches the quarter wavelength of the Brussels No. 1 transmitter (483.9 m.), and may well absorb considerable energy, the amount of which may depend on the earthing resistance. Moreover, the falling off in signal strength has been especially noticed since the wavelength has been changed (January 15th, 1934) from 508.5 m. to 483.9 m.

Another phenomenon which may have something to do with the first one has been noticed. When listening on a receiver coupled directly to the last tuned circuit of one of the transmitters, no trace of the programme radiated by the other transmitter is heard. The same thing happens when the receiver is installed a couple of yards from the aerial. But once the receiver is situated at such a place that the waves have to pass one of the towers, interference between the two programmes is noticeable. While listening to one of the stations, the other one can be heard in the background. As soon as the carrier of the station tuned in is switched off, the other programme disappears as well; exactly as if due to the Luxembourg Effect. Cross-modulation in the receiver and interference between the two programmes in the broadcasting system can be ruled out. The interference fades away very quickly with increase in distance from the transmitters, and has not been noticed at a distance of over two miles. At about one mile the interference is usually very slight and only apparent as a background of the Brussels No. 2 (323.9 m.) programme, while listening to Brussels No. 1. But even at 200 yards the interference is sometimes not noticeable at

all, while on other days it is very strong. As the two oscillations can only exert a mutual influence upon one another, unless both act upon a non-linear device, a possible explanation may be that the interference at short range is caused by re-radiation from the metal towers, this re-radiation depending again on the earthing resistance of the towers.

Maybe some of the readers of *Wireless World* will be able to advance another explanation? A. L. J. BERNAERT.

Velthem, Belgium.

Sound Reinforcement in Theatres

I READ with interest the remarks of your correspondent, Mr. Sidgreaves, in *The Wireless World* of March 15th, on Sound Reinforcement in Theatres.

From his description it is evident that I have visited the same theatre as himself. I also sat in the stalls, and agree with Mr. Sidgreaves in every detail. Apart, however, from "blasting" and other bad effects mentioned by Mr. Sidgreaves, it seemed to me that the apparatus used is capable of excellent reproduction.

It is a pity that after going to the expense of installing what is evidently quite an elaborate P.A. System the management should overlook the importance of making proper use of the control panel. Also, why only two loud speakers? From where I sat, row P, the crooner in a dance band sounded like an "acoustic close-up" of an enraged lion!

By installing several speakers throughout the house, all working well within their maximum output, a more even and natural reproduction would result. After all, the object of sound reinforcement is to enable the audience to hear the words of the performers without effort; not to hear a voice that is so powerful that it detracts from the performance. I admit that at this particular theatre several of the "turns" call for microphone aid, as against plain "sound reinforcement," but, even so, their acts are spoiled by mishandling of the apparatus.

I quite agree with Mr. Sidgreaves regarding the harm caused by badly fitted and handled sound systems, and I hope that other theatres, when installing their own apparatus, will benefit by the mistakes mentioned above, and have properly controlled "mikes" and more than two speakers—even if only out of consideration for the ear-drums of "the stalls," who, since they pay most for their seats, are entitled to a little consideration.

C. HADFIELD GALLOWAY.

London, N.W.3.

Random Radiations

By "DIALLIST"

Stations Re-named

QUITE a few European stations have re-named themselves during the last month or two and some readers may have been rather puzzled by the new call signs. Radio-Vitus now goes under the name of Poste de l'Ile de France. It is at present working on a wavelength of 223.4 metres. Rennes has become Radio-Bretagne and Lille has altered its title to Radio-P.T.T. du Nord. In addition to these, Radio-Paris now gives its call sign as the Poste-National.

I wish that the U.I.R. would make a stand against the adoption by stations of names which do not show the towns in or near which they are situated. Ile-de-France is not so bad, at any rate for those who know Paris; but you don't get very much information about the geographical position of a station from call signs such as "P.T.T. du Nord" or "Radio-Bretagne": the north of France is a wide and rather vaguely defined district and Brittany is pretty big.

Can't We Be Consistent?

Talking of station names, I have long been puzzled over the hopeless inconsistency of most of our published lists of Broadcasters. Lots of foreign places have sound English names which are part of our language and are to be found in our literature as far back as the time of Chaucer. Amongst German broadcasting stations, for instance, both Munich and Nuremberg are good English words. The German names of these places are München and Nürnberg. Why in the official lists does Munich duly appear as Munich though Nuremberg becomes Nürnberg?

Curiouser and curiouser, all of the Italian stations are given their English names (Rome, Naples, Milan, Turin and so on—not Roma, Napoli, Milano, Torino); but when we come to Sweden, Gothenburg, an old English name which appears in all atlases and geography books published up to a few years ago, gives place to Göteborg, which I am willing to wager not one Englishman in ten thousand can even attempt to pronounce correctly! Most of those who have a shot at it produce some hideous sound such as "Gottyborg," though the name in Swedish is quite a pretty one since "g" before "ö" is pronounced like a "y" and it has the same sound when following "r."

What's the sense of printing a name such as Lwòw? I am sure I don't know what an accent over an "o" indicates in Polish; do you?

I have heard its own announcer pronounce it something like Lvoo, but what's wrong with the old name Lemberg, which is easy enough?

They All Have Their Own

Actually, nearly all languages have their own names for important places in foreign countries. A Frenchman who, in speaking French, used words such as London, Dover, Edinburgh or Canterbury would be thought just as much of an intellectual snob as the Englishman who insists on speaking of Paree, Leeyong and Marsay. I had an argument the other day on the subject with another keen wireless man who maintained that I was entirely wrong. "A place," he said, "can have only one name: its own. Its inhabitants use that name and we ought to use it too." My rejoinder took the form of a question: "What about places in bi-lingual countries such as Belgium, where one part of the population knows its capital as Bruxelles and the other as Brüssel, or tri-lingual countries such as Switzerland where Geneva has no less than three equally good and quite different names?"

I do think that if we have real English words for foreign places, names which we can pronounce, we should stick to them. If we must insist on going all foreign, then every name in the list of broadcasting stations should appear in its native form—or forms.

It's just too silly to have lists that are full of inconsistencies.

Jubilee Wireless

THE Postmaster-General did a wise thing when he decided that licences would not be necessary for receiving sets temporarily installed in the schools and so on for reproduction of the Jubilee broadcasts. The rising generation have the strongest possible claims to hear the broadcasts on May 6th, and any readers who possess more than one set can do good work by lending their spares to schools, Scout or Guide headquarters and other institutions where these are not already provided with receiving apparatus. When a second set is not available for loan purposes it may be that the odds-and-ends cupboard contains a variety of valves and components which can be put together without much difficulty into a set that can be handed over for Jubilee duty.

'Ware Interference

Don't let your patriotism outrun your discretion in the matter of Jubilee illuminations. The B.B.C. has wisely issued a reminder that certain kinds of lighting schemes can be responsible for serious interference with wireless reception. It would be a sad thing to gladden the eyes of beholders with a wondrous display of lights but at the same time to distress the ears of listeners with volleys of clicks and crackles! "Silencing" devices, which prevent radiation of the kind that causes interference, are readily available at small cost, and only a little care is required to see that illuminations are innocuous to the listener.

An Optimist

THERE'S an old proverb about the advisability of the cobbler sticking to his last; and one can't help thinking sometimes how sound is the advice it contains when laymen, eminent in other directions, burst into speech or into print on subjects such as wireless or television. The other night a speaker said that a large and imposing playhouse was required right in the heart of the Empire "because the time is not far distant when performances will be televised to every part of the world. This may sound ridiculous, but it is nearer accomplishment than you imagine."

Well, we've got no farther at present in high-definition television than transmission over a quasi-visual range of twenty-five miles or so, and even here few technicians would claim that every problem has been solved. No one can say what discoveries may be made within the next few years, but so far as we can see at present the transmission of high-definition television—and nothing else would be worth the trouble—to all parts of the Empire is not likely to come into being for a very long time, if, indeed, it ever does.

New Apparatus Reviewed

Recent Products of the Manufacturers

AC SHORT-WAVE CONVERTER CHASSIS

THE City Accumulator Co., Ltd., 18-20, Norman's Buildings, Central Street, London, E.C.1, has submitted for examination two chassis and the vertical screen for *The Wireless World* AC Short-wave Converter. They are strictly in accordance with the specification as regards dimensions, positions, and sizes of the holes, and will be supplied complete with the full complement of nuts, screws, and washers needed in the assembly of the two units.

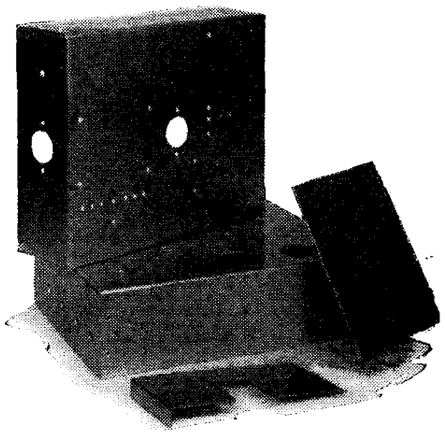

C.A.C. chassis and screen for *The Wireless World* AC Short-wave Converter.

The converter chassis and the aluminium screen costs 7s. 6d., and that for the power supply unit 6s. 6d.

The two chassis and other special fittings are obtainable also from the Peto Scott Co., Ltd., 77, City Road, London, E.C.1. Specimens have been examined and found to comply in every detail with the drawings. They are well finished and cost 7s. 6d. each for the chassis, whilst the two-part screen, two brackets and small metal fixing clip for the dial together cost 3s.

BULGIN INTERFERENCE SUPPRESSOR

THE new model A49 Suppressor Adaptor introduced by A. F. Bulgin and Co., Ltd., Abbey Road, Barking, Essex, consists of a neat bakelite moulding 2¼in. in diameter in which is contained two 0.1 mfd. condensers rated for 250 volts continuous working on either AC or DC.

This unit is intended as a suppressor for mains-borne interference, and, whilst not a panacea for all types of electrical disturbances, it does assist materially in obtaining better reception in that those troublesome crackles and other low-frequency pulsations that account for a bad background are reduced considerably in intensity.

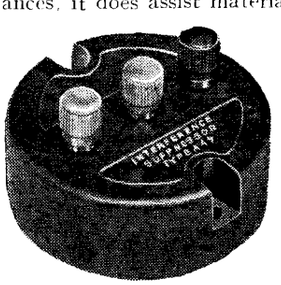

Bulgin type A49 interference suppressor unit.

The suppressor being of the condenser-filter type is joined across the mains point from which the supply is taken for the set, or mounted in the cabinet so that the receiver's fuses protect also the suppressor.

Three terminals are provided; two have red insulated heads and one a black. The last-mentioned is joined to a good earth point, whilst the former are connected each to one mains lead.

The price is 2s. 6d.

SUNBEAM HT BATTERY

TESTS have just been concluded on a 120-volt sample of the recently introduced Sunbeam model dry-cell HT battery made by the Fuller Accumulator Co. (1926), Ltd., Woodland Works, Chadwell Heath, Essex. As the discharge curve shows, the distinguishing feature of the battery is its particularly long life, no fewer than 550 working hours being provided before the end-point was reached.

The discharge was commenced at 7.6 mA. through a fixed resistance of 17,000 ohms, the working periods of four hours alternating with like intervals for recuperation. On the graph the actual working time only is shown, and the curve represents the average battery voltage throughout this period.

The end-point is an arbitrary termination based on the voltage falling to the equivalent of 0.75 volt per cell, or 60 for the battery, there being 80 cells in all. If continued, the discharge curve would show a more rapid fall, but even after 850 hours' work there were 22 volts in the battery.

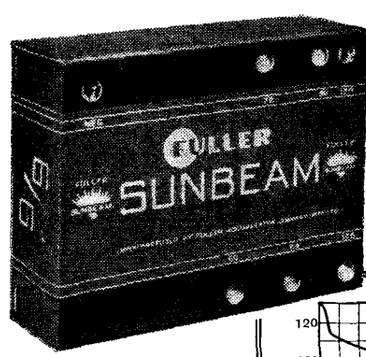

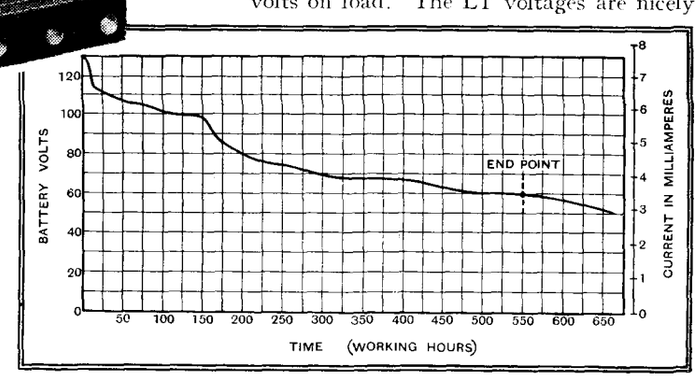

Fuller 120-volt Sunbeam H T battery and its discharge curve.

Up to the assumed end-point the watt-hour capacity is 196.4, giving 2.45 watt-hours per cell, which is exceedingly good for the size of cells employed in this battery.

The new Sunbeam model is undoubtedly a long-life battery, and at 6s. 6d. for a 120-volt is quite reasonable in price. It is available in two styles, square, as illustrated, or long and narrow. A 100-volt model costs 5s. 6d., and one of 60 volts 3s. 6d.

MAINS TRANSFORMER FOR QUALITY AMPLIFIER

A MAINS transformer built to the specification required for operating *The Wireless World* Quality Amplifier has been sent in for test by the London Transformer Products, Ltd., 368, Cobbold Road, Willesden, London, N.W.10. It is wound on an iron core of very generous size secured by cast aluminium end-plates having fixing lugs on two sides. The transformer can be mounted, therefore, with its terminals on the top or at one side according to which best suits the wiring scheme.

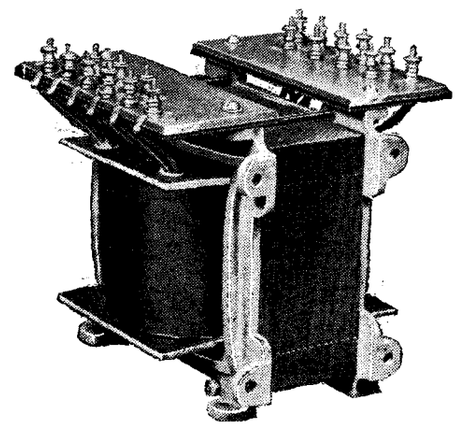

Mains transformer for Quality Amplifier made by London Transformer Products.

Tested under full-load conditions, and with the type of rectifier specified for the amplifier, the unsmoothed DC output was 436 volts at 120 mA., the full-load output from the HT secondary winding being 422 volts RMS.

One LT winding was loaded to give 7 amps., and the voltage measured at the transformer terminal was 4.17. The rectifier was supplied with 2.5 amps. at 4.18 volts, while the one-amp. LT winding gave 4.15 volts on load. The LT voltages are nicely judged, as they allow for the voltage drop in the leads to the various valve holders.

We found the transformer to run perfectly cool on full load, and there was no trace of mechanical hum.

All iron parts are black-enamelled to prevent rust, and the price is 35s.